





Industrial seals

Product overview

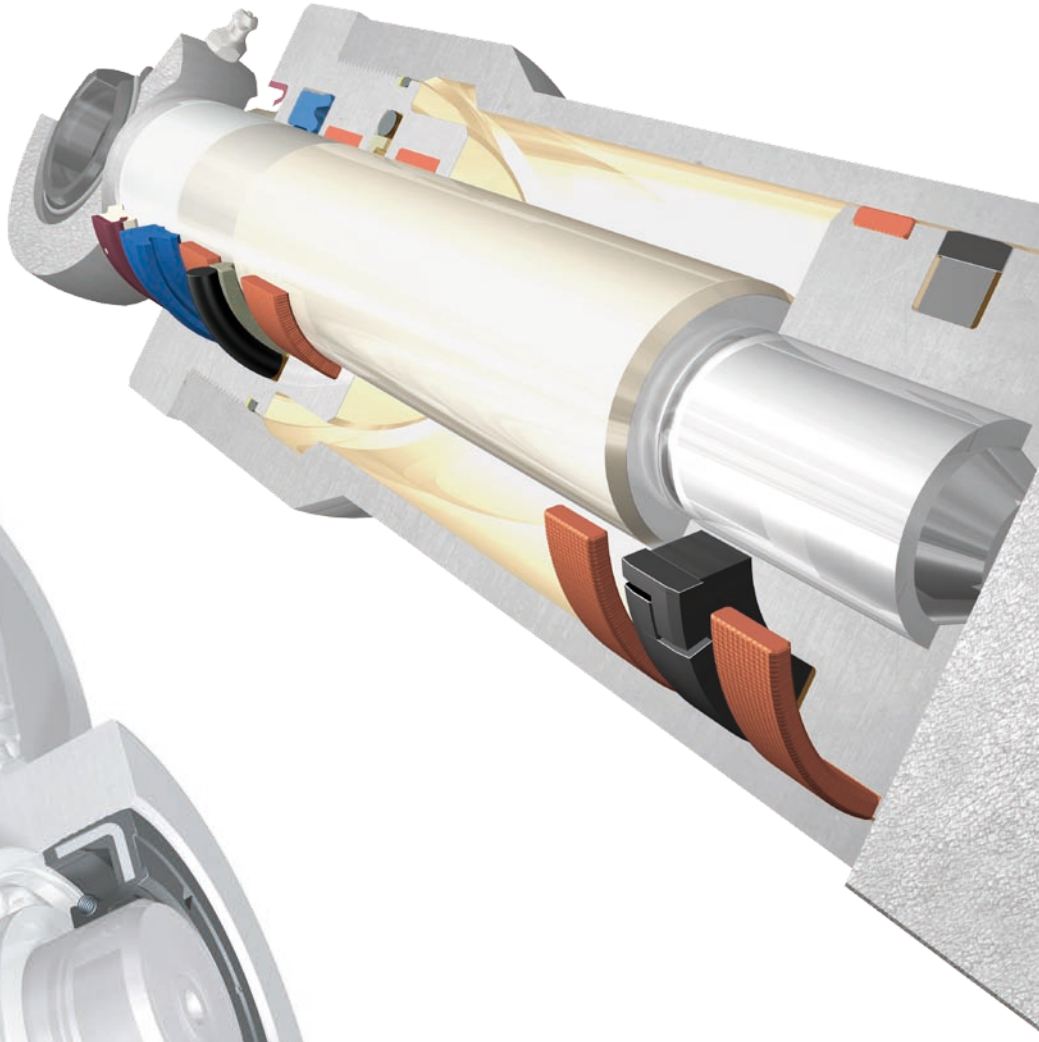





Contents



SKF – the knowledge engineering company 3

SKF industrial seals and accessories overview 4

Radial shaft seals 5
- Sealing lip material overview 6
- Small diameter seals 7
- Seals with nitrile or fluoro rubber sealing lips 8
- Seals with PTFE sealing lips 11
- Large diameter seals 12
- Metal-cased seals 13
- Fabric-reinforced seals 17
- Metal-inserted seals 18

All-rubber seals 19
- Permissible operating conditions 20
- Cassette seals and shaft sealing units 22
- SKF Mudblock cassette seals 23
- SKF SCOTSEAL sealing units 24

Wear sleeves 25

Axial shaft seals 26
- V-ring seals 27
- Metal-cased V-type sealing rings and axial clamp seals 29
- Mechanical seals 30

Hydraulic seals 31
- Material overview 32
- Piston seals 33
- Selection matrix 40
- Rod seals 41
- Selection matrix 48
- Wiper seals 49
- Selection matrix 53
- Guides 54

Static seals 55
- O-rings 56
- Back-up rings 57

Product index 58



SKF – the knowledge engineering company



The SKF Group is the leading global supplier of products, solutions and services in the field of rolling bearings, seals, mechatronics, services and lubrication. The services offered by the SKF group include technical support, maintenance services, condition monitoring and training.

SKF was founded in 1907 and grew at a rapid rate to become a global company. As early as 1920, the company was well established in Europe, America, Australia, Asia and Africa. Today, SKF is represented in more than 130 countries. The company has more than 100 manufacturing sites and sales companies supported by some 15 000 distributors. SKF also has a widely used e-business marketplace and an efficient global distribution system.

The SKF Group has a global 14001 environmental certification and a global OHAS 18001 health and safety management certification. Individual divisions have been approved for quality certification in accordance with ISO 9001. The automotive business units are also certified according to ISO/TS 16949:2002.

From the company that invented the self-aligning ball bearing 100 years ago, SKF has evolved into a knowledge engineering company that uses its experience and technical expertise to create unique value propositions for its customers. These solutions are based on our technical knowledge and capabilities within five closely related technology platforms, namely bearings and units, seals, mechatronics, services and lubrication systems.

Complemented by a worldwide service network and manufacturing footprint, SKF value propositions are available wherever and whenever customers need them. SKF stands ready to serve the market with world-class products, competencies, intellectual resources and a vision for success.

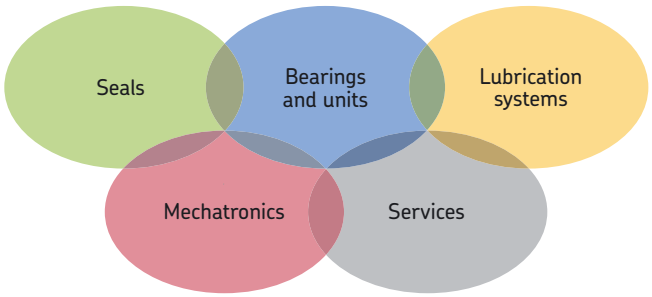



SKF industrial seals and accessories overview

The SKF range of industrial seals and accessories is divided into five main groups; radial shaft seals, wear sleeves, axial shaft seals, hydraulic seals and static seals. The purpose of this publication is to provide an overview of the main products within these groups, their characteristics and suitability for different application conditions. Detailed information about the products can be found in the SKF catalogues “Industrial shaft seals” and “Hydraulic seals”.

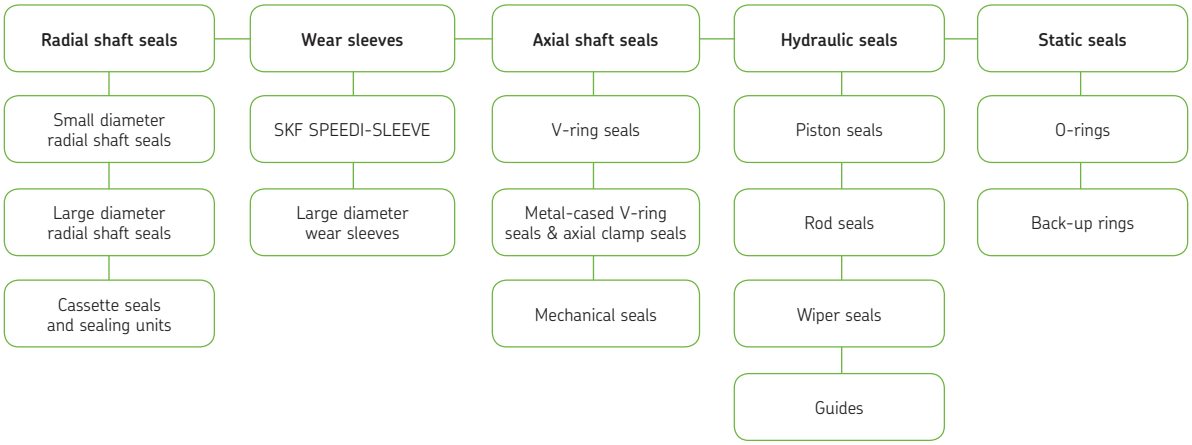

Radial shaft seals

Whenever a shaft rotates, it needs a bearing arrangement for smooth and effective operation. Wherever there is a bearing, there is also a need for an appropriate sealing solution to protect that bearing, so that it operates reliably and achieves maximum service life. The performance and service life of a bearing arrangement is directly related to the sealing solution's ability to fulfil its four main tasks:

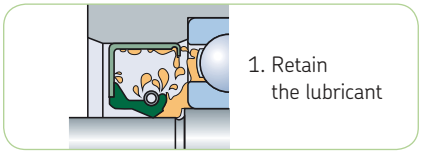

1. Retain the lubricant

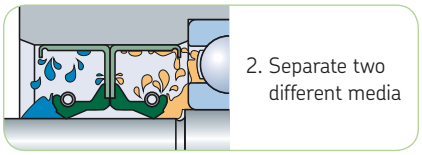

2. Separate two different media

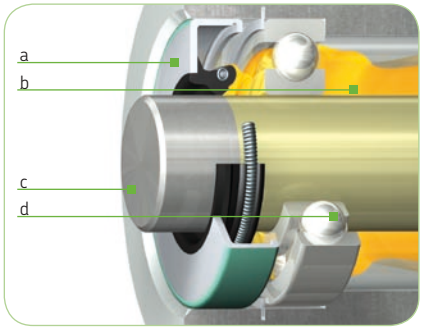

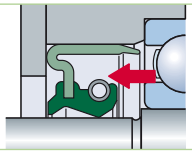

3. Seal under pressure

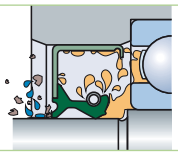

4. Exclude dirt and moisture

a. Radial shaft seal
b. Lubricant
c. Shaft
d. Bearing

The most common types of seals used to protect bearing arrangements in general industrial applications are radial shaft seals for shaft diameters up to 203 mm (8 in). Large diameter seals, for shaft diameters above 203 mm, have special features and are intended for use in large-size and heavy-duty applications.

On the following pages, the standard range of SKF radial shaft seals is presented with a short description. In depth technical product information can be found in the catalogue "Industrial shaft seals". For information about availability and delivery time, please contact your nearest SKF representative or authorized distributor.

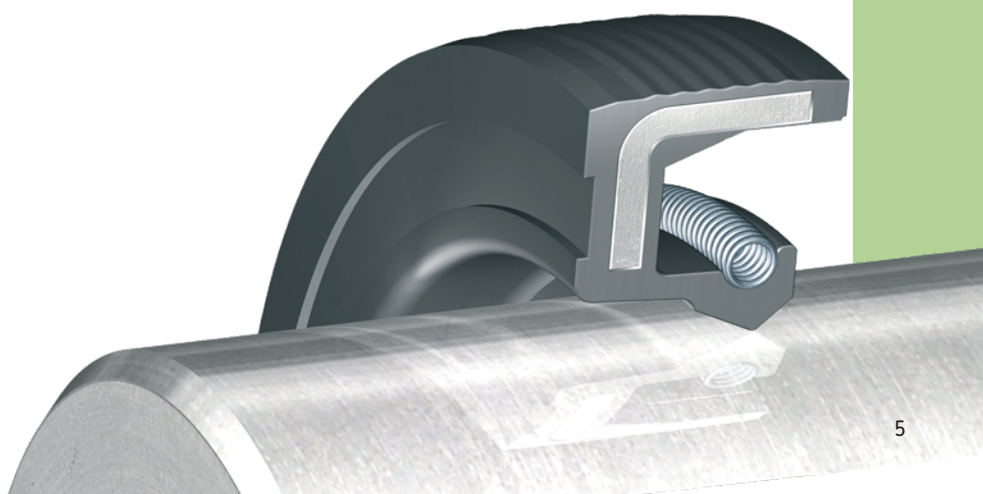

Sealing lip material overview

In addition to seal design, the sealing lip material significantly contributes to seal performance and reliability. In order to accommodate different application requirements, SKF seals are produced in a variety of sealing lip materials, see table below. These materials have characteristics and individual properties that make them particularly suitable for specific applications.

Details about the physical properties and chemical resistance of seal materials to various media encountered in operation can be found in the section “Chemical resistance” in the catalogue “Industrial shaft seals”.

Codes are used to identify the sealing lip material of SKF seals. The codes for the most commonly used seal materials are listed in the table below. The codes also appear in the designations of radial shaft seals. For seals produced from a combination of materials, a combination of the code letters is used, e.g. RV (nitrile rubber and fluoro rubber).

SKF seals are available in several other materials on request. Please contact your SKF sales representative or authorized distributor for more information.

SKF sealing lip materials

Composition of basic material	Designation according to	
	SKF	ISO 1629/ ASTM[1] D1418
Acrylonitrile-butadiene rubber (nitrile rubber)	R, RG	NBR
Hydrogenated acrylonitrile-butadiene rubber (SKF DURATEMP)	H	HNBR
Carboxylic-acrylonitrile-butadiene rubber (Duralip)	D	XNBR
Fluoro rubber (LongLife)	V	FKM
Polytetrafluoroethylene	T	PTFE

[1] American Society for Testing and Materials

IMPORTANT SAFETY NOTE: At temperatures above +300 °C (+570 °F), all fluoro elastomers and PTFE compounds give off dangerous fumes. If there is unintentional contact with your skin or if the vapours have been inhaled, a doctor should always be consulted.

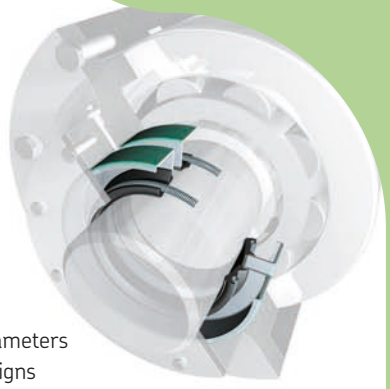

Small diameter seals

SKF small diameter radial shaft seals are the most common seals and are used for shaft diameters ranging from 3 to 203 mm (0.125 to 8 in). These seals are available in a wide range of designs and materials to meet the varying demands of different applications. See Matrix 1 for an overview.

This chapter presents the most commonly used small diameter radial shaft seals within the SKF range. Most of these seals conform to one of the designs standardized in the international or national standards, for example ISO, ASTM, DIN or JIS.

Radial shaft seals overview
Small diameter range

Matrix 1

	Design				
	Outside diameter		Sealing lip		Auxiliary lip
R, RG Nitrile rubber V Fluoro rubber PTFE Polytetrafluoroethylene **Seal types**	Configuration	Material code	Configuration	Material code	A = Contacting B = Non-contacting
HMS5 HMSA10	Rubber	RG, V	Straight	RG, V	B (HMSA10)
HMS4 HMSA7	Rubber	R, V	Straight	R, V	A (HMSA7)
CRW1 CRWH1	Metal + Bore-Tite	–	SKF WAVE	R, V	N/A
CRWA1 CRWAH1	Metal + Bore-Tite	–	SKF WAVE	R, V	B
CRW5 CRWA5	Metal + Bore-Tite	–	SKF WAVE	R, V	B (CRWA5)
CRS1 CRSH1	Metal + Bore-Tite	–	Straight	R, V	N/A
CRSA1 CRSAH1	Metal + Bore-Tite	–	Straight	R, V	A
RD10 RD30 RD60	Metal	–	Special	PTFE	N/A
RD11 RD70 RD71	Metal	–	Special	PTFE	A (RD11, RD71)
RDD13 RDD14 RDD15	Fluoro-plastic/ rubber	PTFE + R, V	Special	PTFE	N/A

HMS5



RG V



HMSA10



RG V



Seals with nitrile or fluoro rubber sealing lips

HMS5 and HMSA10

The new metric radial shaft seals, HMS5 and HMSA10, are designed in accordance with ISO 6194 and DIN 3760 for use in a wide range of industrial applications.

Main features:
- New optimized seal material
- Spring-loaded sealing lip
- Balanced sealing lip and flex section
- Beaded outside diameter
- Auxiliary lip (type HMSA10 only)

Design
The rubber outside diameter provides optimized sealing ability in the housing, also at considerable surface roughness or in split housings. The beads provide improved sealing ability and retention in the bore. They also prevent spring back at installation.

The sealing lip and flex section are balanced to withstand considerable dynamic runout and shaft-to-bore misalignment.

The auxiliary lip on type HMSA10 is non-contacting, which means that the seal type normally can be used at the same speeds as the single-lip type HMS5, without significantly increasing torque and underlip temperature.

Material
The new nitrile rubber compound, SKF NBR 3243, is the result of long experience and the latest developments in seal material research at SKF. Advantages of this material include

- good resistance to ageing
- very good compatibility to synthetic oils
- very good pumping ability
- good wear resistance.

Pumping ability is defined as the time it takes for the seal to return a certain amount of oil from the air side to the oil side. The microstructure of the SKF NBR 3243 compound results in that the seal rapidly pumps back the oil.

The complete range of HMS5 and HMSA10 seals is also available on request in a fluoro rubber compound and with a stainless steel garter spring. This rubber compound has the designation suffix V and is used in applications where temperatures exceed the limits of nitrile rubber.

HMS4 and HMSA7 seals

The rubber outside diameter seals HMS4 and HMSA7 have a carbon steel reinforcing ring and are preloaded by a garter spring. They are available in either nitrile or fluoro rubber, primarily in inch sizes, but also in a limited metric range.

- HMS4: The basic design.
- HMSA7: The same design as HMS4 but with a contacting, auxiliary lip.

The HMS4 and HMSA7 seals will continually be replaced by the newly developed HMS5 and HMSA10 seals during a transition period.

HMS4





HMSA7





CRS seals

The metal-cased CRS seals are relatively easy to install and will, provided the housing bore meets the accurate requirements, have a tight fit in the housing bore. They all have a straight-edged sealing lip and a carbon steel garter spring.

- CRS1: Basic type with one metal case.
- CRSH1: Same as CRS1 but with an added inner case providing increased stiffness.
- CRSA1: Same as CRS1 but with a contacting, auxiliary lip for increased exclusion capabilities.
- CRSHA1: Designed with an auxiliary lip and reinforced by an inner metal case.

All CRS seals are available with sealing lips made of either nitrile or fluoro rubber and are stocked in a wide range of sizes.

CRS1





CRSA1





CRSH1





CRSHA1





CRW1





CRWH1





CRWA1





CRWHA1





Low-friction seals with SKF WAVE lip design

The seal types CRW1, CRWH1, CRWA1 and CRWHA1 have an SKF WAVE lip design to reduce friction and heat generation. The sinusoidal form of the SKF WAVE lip considerably extends the path on the counter surface and reduces the radial load against the shaft. The metal outside diameter simplifies installation and provides a tight fit in the housing bore.

The outside diameter of the seals is coated with Bore-Tite, a non-hardening, water-based acrylic sealant that enables the seals to accommodate small imperfections in the housing bore surface to improve sealing performance.

The CRW seals are primarily designed for lubricant retention but the types CRWA1 and CRWHA1 are also suitable for exclusion of dust and light contaminants.

- CRW1 has a single metal case, a hydrodynamically formed SKF WAVE lip and a carbon steel garter spring.
- CRWH1 has the same features as CRW1 but adds a double metal case.
- CRWA1 has a single metal case, a hydrodynamically formed SKF WAVE seal lip, a carbon steel garter spring and a non-contacting, auxiliary lip.
- CRWHA1 has the same design as CRWA1 but adds a double metal case.

All CRW seals are available in either nitrile or fluoro rubber.

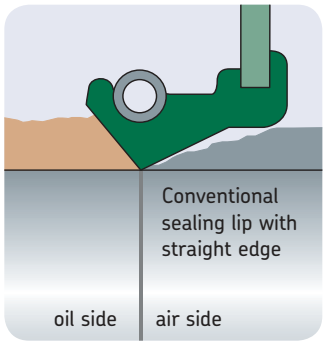

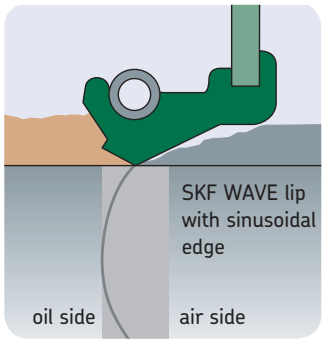

CRW5





CRWA5





Pressure profile SKF WAVE lip designs

The seal types CRW5 and CRWA5 with a pressure profile SKF WAVE lip design are appropriate for applications where pressure differentials across the seals are higher than normal. They are easy to install and provide a firm and accurate seating in the housing bore. The seals are coated with Bore-Tite on their outside diameter.

The seals are primarily intended for lubricant retention, but type CRWA5 is equipped with a non-contacting, auxiliary lip to exclude dust and light contaminants. CRW5 and CRWA5 are available in nitrile and fluoro rubber.

- CRW5 has a pressure profile SKF WAVE lip, a carbon steel garter spring and a metal case.
- CRWA5 has the same design as the CRW5 but adds a non-contacting, auxiliary lip.

Note: Where there is a pressure differential across the seal, the seal should be secured axially in the housing bore.

Seals with PTFE sealing lips



Series RD

Seals in the RD series, with sealing lip(s) made of PTFE, are protected by a metal case and one or two additional inner cases. They are designed to withstand aggressive environments, high temperatures, high pressures and dry running of the sealing lip(s). These PTFE radial shaft seals are available in several variants. The metal case can be made of aluminium, carbon steel or stainless steel. Different PTFE compounds are used for the sealing lips, including materials conforming to US Food and Drug Administration (FDA) regulations. The nominal dimensions of the PTFE radial shaft seals are in accordance with ISO 6194/1:1982 and DIN 3760-1996, which makes them interchangeable with traditional radial shaft seals in existing applications.

Series RDD

Seals in the RDD series are designed without a metal case and are intended for use in the food industry. They withstand aggressive environments, low temperatures, high pressures and dry running of the sealing lip(s). An O-ring in a groove on the outside diameter of the seal provides excellent static sealing ability. The O-ring material can be selected to meet different operating conditions. RDD seals have the same nominal dimensions as the metal-cased RD designs.

Both series are manufactured on demand.

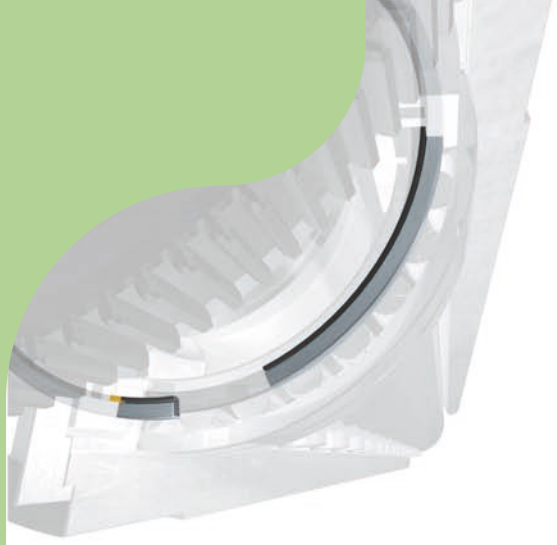

Radial shaft seals

Large diameter seals

Heavy industries, such as metal, construction, wind energy, forestry, mining and pulp and paper, provide a challenging environment for large diameter radial shaft seals. Operating within a wide range of speeds, temperatures and environmental conditions, these seals are expected to reliably retain lubricants while preventing harsh contaminants from entering the system.

Generally, seals for shaft diameters larger than 203 mm (8 in) are known as large diameter seals. SKF large diameter seals are available in a wide range of designs and materials to meet the demands of each challenging application. The range includes

- Metal-cased seals
- Rubber outside diameter seals
  - metal-inserted
  - fabric-reinforced
  - all-rubber

The different designs are generally suitable for applications shown in the table below.

Large diameter seals applications

Application	General machinery Industrial gearboxes	Rolling mills, metal Hot strip mills Cold rolling mills Industrial gearboxes	Industrial gearboxes General machinery Rolling mills, paper mills	Special machinery Crushers, shredders, bailers etc.
Type	**General purpose**	**Water/scale exclusion**	**High speed** **> 25,4 m/s** **> 5 000 ft/min**	**High Dynamic Runout (DRO) or Shaft-To-Bore Misalignment (STBM)**
HDS1-3, HDSD-E	3	2	x	2
HDS4, 6	2	2	3	2
HDS7	2	3	x	x
HDSA, B, C	3	2	x	3
HDL	2	2	3	3
HS4-8	2	x	2	3
SBF, HSF	3	1	x	x

1 = Good solution 2 = Better solution 3 = Best solution x = Not recommended

Metal-cased seals

HDS7



The highly engineered HDS7, developed by SKF primarily for grease lubricated applications, provides enhanced exclusion capabilities. It features an optimized, springless lip profile that aggressively pumps contaminants away from the lip, making it an excellent choice for heavily contaminated environments such as rolling mill applications, where water and scale are present. The springless lip design of the HDS7 also reduces the radial load that can lead to increased seal wear and elevated underlip temperature.

The HDS7 seal can also be equipped with an auxiliary lip made of PTFE and/or an elastomer applied to the metal outside diameter, see “Additional design options” on page 16.

Type HDS7 is available on a made-to-order basis in the sealing lip materials nitrile rubber for common use, Duralip for improved abrasion resistance and SKF DURATEMP that combines improved abrasion resistance with increased temperature capability.

HDL seals



The HDL seals are premium metal-cased radial shaft seals for oil retention. They are specially designed for severe operating conditions like high speeds and temperatures, high run-out and high misalignment.

The HDL seals feature a stainless steel garter spring combined with individual stainless steel finger springs around the entire circumference of the seal. The spring combination helps the seal maintain high sealing ability also under severe service conditions.

Type HDLA is equipped with a non-contacting, auxiliary lip for extra protection against contaminants.

All HDL seals are available in the sealing lip materials nitrile rubber, hydrogenated nitrile rubber and fluoro rubber.

HDS1



HDS2



HDS3



HDS1, HDS2 and HDS3

The HDS1, HDS2 and HDS3 seals are the most commonly used metal-cased seals, designed for general purpose applications. They are designed with a heavy-duty metal case and a stainless steel garter spring.

- HDS1 has its spring installed in a protective SKF Springlock groove that encloses some 270° of the spring.
- HDS2 adds an SKF Springcover that locks the spring in the groove. HDS2 is recommended for blind installations where spring displacement may go undetected.
- HDS3 has the same features as the HDS2 but adds adjustable spacer lugs.

All of them can also be equipped with an auxiliary lip made of PTFE and/or an elastomer applied to the metal outside diameter, see “Additional design options” on page 16.

The seals are manufactured on a made-to-order basis and are available in nitrile rubber, Duralip, SKF DURATEMP or LongLife. Nitrile rubber is the standard material for HDS1 and HDS2 while Duralip is the standard material for HDS3.

HDSA, HDSB and HDSC

These seals are designed with an elastomeric auxiliary lip in addition to the sealing lip. They are intended for use in highly contaminated applications where axial space is insufficient for more than one seal.

- HDSA: The chamfer of the auxiliary lip faces the sealing lip, allowing easier shaft installation from the direction of the sealing lip.
- HDSB: The chamfer of the auxiliary lip faces away from the sealing lip, allowing easier shaft installation from the back but with the downside of somewhat reduced exclusion ability compared to the HDSA seals.
- HDSC: The auxiliary lip is located in front of the sealing lip with its chamfer facing the same direction as the sealing lip to provide maximum exclusion ability.

All of them are available with an SKF Springcover (HDSA2, HDSB2 and HDSC2) or without an SKF Springcover (HDSA1, HDSB1, HDSC1).

These seals can also be equipped with an elastomer applied to the metal outside diameter, see “Additional design options” on page 16.

The HDSA, HDSB and HDSC seals are available on a made-to-order basis in nitrile rubber, Duralip, SKF DURATEMP or LongLife.

HDSA



HDSB





HDSC





HDSD1





HDSD2





HDSE1





HDSE2





HDSD and HDSE

These seals have a robust double metal case and are equipped with two sealing lips providing highly efficient protection against both liquid and solid contaminants.

- HDSD seals are designed with the two sealing lips facing opposite directions. They are used for applications requiring the separation of two fluids.
- HDSE seals have two sealing lips facing the same direction. They are used where a back-up seal is needed for additional retention ability.

The HDSE seals can also be equipped with an auxiliary lip made of PTFE, see “Additional design options” on page 16.

All of them are available with an SKF Springcover (HDSD2, HDSE2) or without an SKF Springcover (HDSD1, HDSE1). They are available on a made-to-order basis in nitrile rubber, Duralip, SKF DURATEMP or LongLife.

When using an HDSD or HDSE seal, it is very important to provide a means to lubricate the sealing lips, i.e. the cavity between the sealing lips must be packed with grease or the seal supplied with lubrication holes drilled from the outside diameter into the cavity between the lips.





Additional design options

The HDS1, HDS2, HDS3, HDS7 and HDSE seals can also be equipped with a PTFE auxiliary lip to further protect the bearing and sealing lips against dust particles in heavily contaminated environments. And, the PTFE lip can be positioned and directed to provide additional lubricant retention. The PTFE lip is clamped between the metal case and the rubber seal body without significantly increasing the total seal width. It can withstand wear, chemical attack and dry running and offers improved seal performance with only a minimum of friction torque.

The HDS1, HDS2, HDS3, HDS7 seals are also available with an elastomer applied to the outside diameter for use in applications with bore temperatures up to 100 °C (210 °F). The elastomer accommodates imperfections in the housing bore surface, improving service life and performance of both seal and equipment. The rubber outside diameter also reduces the risk of damage to the housing during installation and removal.

For more information on these design options, please refer to the publication “Large diameter seals“.

Fabric-reinforced seals

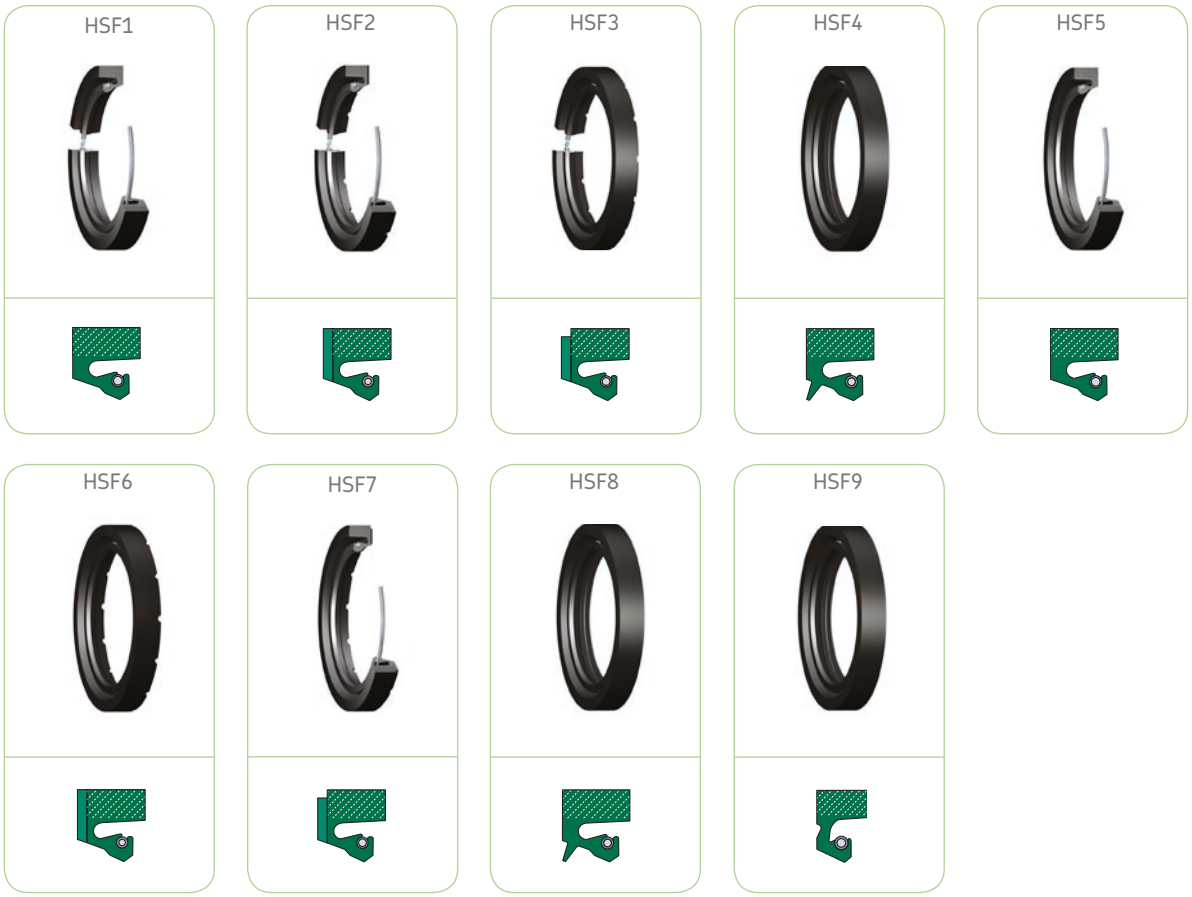

Seals in the HSF series have a strong, flexible fabric-reinforced rubber back instead of a metal case. Their conventional sealing lip is preloaded by a stainless steel garter spring that is positioned in an SKF Springlock groove. The HSF seals are available in solid or split versions and are intended for use in heavy-duty applications such as gear drives, propeller shafts, cold and hot mill work rolls, pumps, paper machinery, etc.

The HSF series consists of the HSF5, HSF6, HSF7 and HSF8 solid seal types and their split versions HSF1, HSF2, HSF3 and HSF4.

- HSF5 is the standard single-lip design
- HSF6 adds radial lubrication grooves on the back of the seal
- HSF7 adds a circumferential lubrication groove
- HSF8 offers a contacting, auxiliary lip to the standard HSF5 design

The HSF1, 2, 3 and 4 are the split versions of the solid types listed above. There is also a pressure profile type, HSF9, in solid version only. All versions have a threaded spring connection as standard.

All HSF seals are finished oversize to the housing to allow proper compression and stability. A cover plate is required to properly install and apply all HSF seal types. The plate creates an axial preload to provide reliable static sealing performance. The plate should also be designed to avoid seal distortion during installation.

The HSF seal series is available in nitrile and fluoro rubber.

SBF





Metal-inserted seals

SBF

The SBF seal is designed with a moulded-in, flexible metal stiffening ring eliminating the need of a cover plate. A stainless steel garter spring is positioned in the SKF Springlock groove and an optional SKF Springcover is available.

Type SBF can be used as an upgrade to fabric-reinforced seals in many applications that are either grease or oil lubricated.

SBF seals are available in both nitrile and fluoro rubber.

HDS4





HDS4 and HDS6

HDS4 and HDS6 seals are designed with an L-type sheet steel reinforcement ring and 12,7 mm (0.5 in) spacer lugs moulded into the seal body. The lugs can be trimmed or removed if necessary.

- HDS4 features a patented moulded-in garter spring that cannot be displaced during difficult installations. The HDS4 provides very good sealing performance in oil lubricated applications.
- HDS6 is a springless version of the HDS4 for grease retention and contaminant exclusion.

Nitrile rubber is standard for both the HDS4 and HDS6, but they are also available in Duralip, SKF DURATEMP and LongLife.

HDS6





All-rubber seals



All-rubber seals in the HS series are available either solid or split and do not contain any metal or fabric reinforcement. The actual seal is finished oversize to the housing to allow proper compression and stability. A cover plate is required to compress the seal within the cavity, helping stabilize the seal, close the split joint and prevent leakage.

A garter spring provides the radial load against the shaft.

- HS4 is a solid seal with a spring positioned in the SKF Springlock groove. It is recommended for both vertical and horizontal shafts.
- HS5 has the same design as the HS4 with the addition of an SKF Springcover for added protection against spring pop-out during handling and installation and against contaminants.

Where shaft removal is impractical, the split versions of the HS series are an excellent choice. They are simply placed around the shaft and pushed into the seal bore, then held firmly by a cover plate that compresses the split joint together. HS split seals perform best with grease or heavy lubricants but can also be used with light lubricants if the level is kept well below the shaft centre line, particularly at higher surface speeds.

- HS6 is designed with a spring-loaded sealing lip and an SKF Springlock groove. HS6 features a separate, loose garter spring with a hook-and-eye spring connection unless otherwise specified.
- HS7 has a spring-loaded sealing lip for grease lubrication only and is equipped with both an SKF Springlock groove and an SKF Springcover. A control-wire spring connector is used to join the seal ends together. This unique design simplifies installation but does not provide the same high sealing performance as other seals in the HS series.
- HS8 is designed with a spring-loaded sealing lip, SKF Springlock groove, SKF Springcover and a hook-and-eye spring connector. The spring is entirely enclosed except for a small portion on either side of the split. HS8 provides the most effective sealing performance of all the split types and is the preferred design for retaining low viscosity lubricants and excluding water. HS8 seals perform best on horizontal shafts, but may also be used on vertical shafts if not flooded with lubricant.

The HS series is available in both nitrile and fluoro rubber materials.

Large diameter radial shaft seals, permissible operating conditions

Standard design (preferred design)	Other basic designs	Material code	Operating temperature range	
			°C	°F
 HDS7	 HDS6	R D H	–40 to +100 –40 to +100 –40 to +150	–40 to +210 –40 to +210 –40 to +300
 HDL	 HDLA	R H V	–40 to +100 –40 to +150 –40 to +200	–40 to +210 –40 to +300 –40 to +390
 SBF		R V	–40 to +100 –40 to +200	–40 to +210 –40 to +390
 HDS2	 HDS1  HDS3  HDS4	R D H V	–40 to +100 –40 to +100 –40 to +150 –40 to +200	–40 to +210 –40 to +210 –40 to +300 –40 to +390
 HDSA2	 HDSA1  HDSB2  HDSB1  HDSC2  HDSC1	R D H V	–40 to +100 –40 to +100 –40 to +150 –40 to +200	–40 to +210 –40 to +210 –40 to +300 –40 to +390
 HDSE2	 HDSE1  HDSD2  HDSD1	R D H V	–40 to +100 –40 to +100 –40 to +150 –40 to +200	–40 to +210 –65 to +210 –40 to +300 –40 to +390
 HS solid  HS5	 HS4	R D H V	–40 to +100 –40 to +100 –40 to +150 –40 to +200	–40 to +210 –40 to +210 –40 to +300 –40 to +390
 HS split   HS8	 HS6  HS7	R D H V	–40 to +100 –40 to +100 –40 to +150 –40 to +200	–40 to +210 –40 to +210 –40 to +300 –40 to +390
 HSF solid  HSF5	 HSF6  HSF7  HSF8  HSF9	R V	–40 to +100 –40 to +200	–40 to +210 –40 to +390
 HSF split   HSF1	 HSF2  HSF3  HSF4	R V	–40 to +100 –40 to +200	–40 to +210 –40 to +390

	Pressure differential	Coaxiality mm (in)	Runout (Dynamic eccentricity of shaft) mm (in)	Maximum shaft surface speed m/s (ft/min)	Ease of installation	Ability to seal low viscosity lubricants and exclude water
	0	1,6 (0.062)	2,4 (0.093)	25 (>5 000) depending on the operating conditions	Excellent	Highly effective exclusion of water and solid contaminants and excellent retention of grease.
	0,1 (15)	2,5 (0.1)	2,4 (0.093)	24 (>4 700) 25 (>5 000) 35 (>7 000)	Good	Excellent, including retention of light oils at high surface speeds and misalignment.
	0,1 (15)	1,5 (0.06)	2,4 (0.093)	25 (>5 000)	Excellent	Excellent for oil or grease retention.
	0,1 (15)	1,6 (0.062)	2,4 (0.093)	25 (>5 000)	HDS2, HDS3, HDS4: Excellent HDS1: Good	Excellent for oil or grease retention.
	0,1 (15)	1,6 (0.062)	2,4 (0.093)	25 (>5 000)	Excellent to good, varies with equipment design.	HDSA/B: Excellent for oil or grease retention with exclusion of light to moderate contamination. HDSC: Good grease retention, increased protection against contamination.
	0,1 (15)	1,6 (0.062)	2,4 (0.093)	25 (>5 000)	HDSD2, HDSE2: Excellent HDSD1, HDSE1: Good	HDSD: Excellent for oil or grease retention and exclusion of light to moderate contamination or separation of two media. HDSE: Good grease retention, increased protection against contamination.
	0,07 (11)	1,6 (0.062)	2,4 (0.093)	HS4: 15 (3 000) HS5: 13 (2 500)	HS4: Good HS5: Good	HS4: Good HS5: Good
	0	1,6 (0.062)	2,4 (0.093)	HS6: 10 (2 000) HS7: 7,5 (1 500) HS8: 10 (2 000)	HS6: Fair HS7: Excellent HS8: Good	HS6, HS8: Good to excellent for oil or grease retention HS7: Good (grease only)
	0,03 (5)	1,5 (0.06)	2,4 (0.093)	15 (>3 000) depending on the operating conditions	Good to excellent	Excellent
	0	1,5 (0.06)	2,4 (0.093)	15 (>3 000) depending on the operating conditions	Fair to good depending on the available space for installation	Good to excellent

Cassette seals and shaft sealing units

Cassette seals and sealing units are intended for use in heavy-duty applications such as off-road vehicles, agricultural or similar construction machinery where environmental and operating conditions are harsh. These seals represent the increased complexity of sealing technology when compared with standard sealing solutions.

The geometry of cassette seals provides optimum protection against water, dust, mud and other contaminants. This improved protection is the result of the special radial and axial sealing lips, unitized with axial and radial wear sleeves. Cassette seals eliminate the need to machine the shaft prior to seal replacement.

SKF cassette seals and sealing units are tailored to the customer's specific installation requirements as well as to the specific operating conditions.

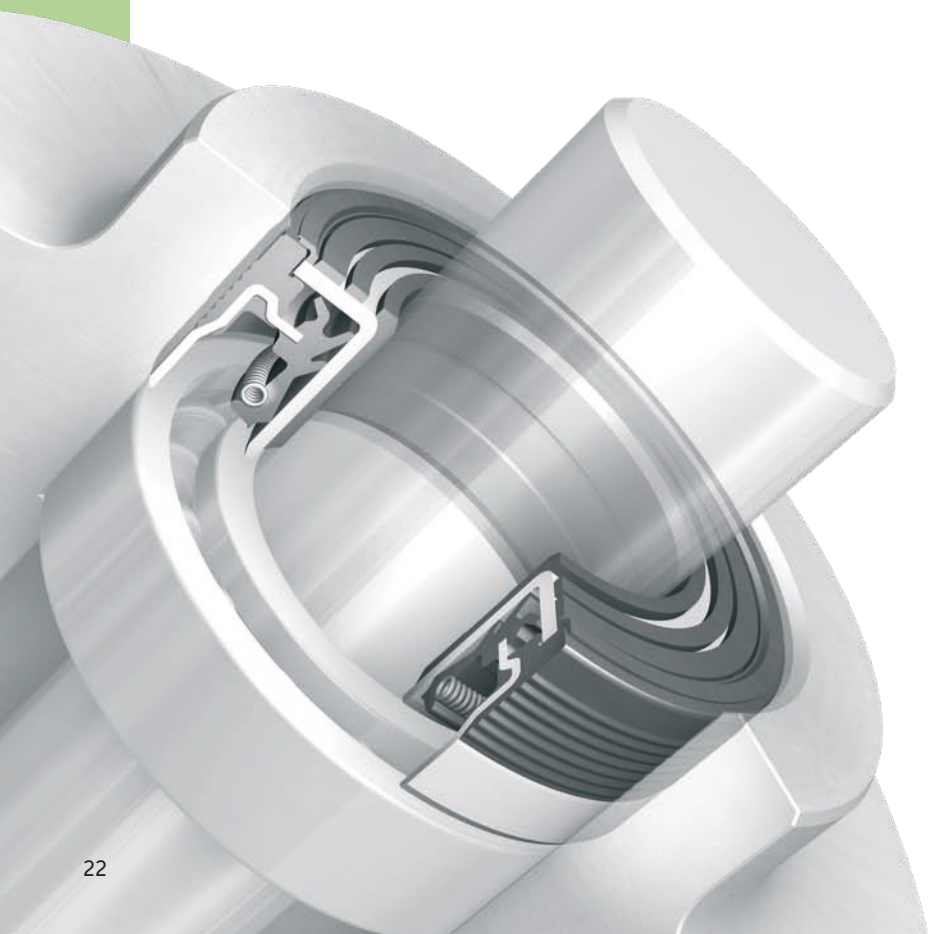

SKF Mudblock cassette seals



SKF Mudblock cassette seals are a new generation of radial shaft sealing units specifically developed for heavy-duty applications in harsh environments and difficult operating conditions.

SKF Mudblock cassette seals are customized sealing solutions that have the following options:

- Spring-loaded primary sealing lip
- Auxiliary sealing lips
- Wear sleeves
- Rubber-covered outside surfaces

They can be made from a variety of elastomeric materials, including nitrile and fluoro rubber.

The geometry of SKF Mudblock cassette seals has been optimized to provide excellent retention of either grease or oil and maximum protection against liquid or solid contaminants.

SKF SCOTSEAL Classic





SKF SCOTSEAL Longlife



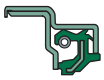

SKF SCOTSEAL Plus XL





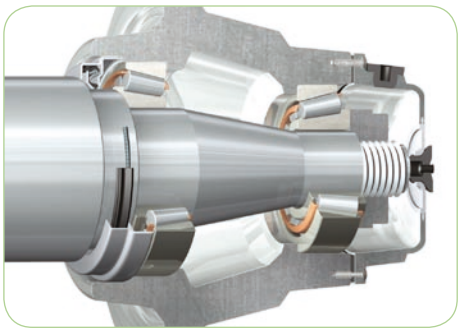

SKF SCOTSEAL sealing units

An SKF SCOTSEAL is a customized sealing unit that is designed to retain lubricants and exclude contaminants in hub bearing arrangements, typically found on the axles of commercial and off-road vehicles. There are three different SKF SCOTSEAL designs:

- SKF SCOTSEAL Classic: Unitized one-piece seal consisting of a metal-inserted sealing element and a metal case. The sealing element is designed with one spring-loaded sealing lip that seals against the metal case and two auxiliary lips that exclude contaminants. The metal case has a Bore-Tite coated outside diameter and protects the sealing lips from being damaged during installation. The unit is press fit into the hub bore using SKF SCOTSEAL installation tools. SKF SCOTSEAL Classic sealing units are proven solutions for heavy-duty applications.

- SKF SCOTSEAL Longlife: Unitized one-piece seal consisting of a metal-inserted sealing element and a metal case. The sealing element is designed with one spring-loaded sealing lip that seals against the metal case and three auxiliary lips that exclude contaminants. The metal case has a Bore-Tite coated outside diameter and protects the sealing lips from being damaged during installation. The unit is press fit into the hub bore using SKF SCOTSEAL installation tools. SKF SCOTSEAL Longlife sealing units are robust solutions with excellent synthetic lubricant retention properties and high resistance to dirt ingress even at high temperatures.

- SKF SCOTSEAL Plus XL: The most advanced SKF SCOTSEAL design consisting of a metal-inserted sealing element and a metal case with a rubber outside diameter. The sealing element is designed with one spring-loaded sealing lip that seals against the metal case and three contacting auxiliary lips that exclude contaminants. SKF SCOTSEAL Plus XL sealing units are robust solutions with excellent synthetic lubricant retention properties and high resistance to dirt ingress even at high temperatures. They are easy to install and require no installation tool.

Wear sleeves

For radial shaft seals to perform efficiently, the condition of the counterface, i.e. shaft surface, is of significant importance. If the counterface is worn or damaged, the seals will not be able to fulfil their function; to retain lubricant and exclude contaminants.

SKF wear sleeves have been developed to easily solve the problem of worn seal counterfaces. They are simply pushed over the damaged surface, allowing the shaft to be re-used within minutes and at a fraction of the cost of traditional reworking. SKF wear sleeves are available in two different designs:

- SKF SPEEDI-SLEEVE: Very thin-walled wear sleeve, 0,28 mm (0.011 in), that allows the same size seal as the original to be used. The SKF SPEEDI-SLEEVE range consists of the standard version for normal operating conditions and the SKF SPEEDI-SLEEVE Gold for harsh operating conditions. They are available for shaft diameters up to approx. 200 mm (8 in).

- Large diameter wear sleeves (LDSLV): Wear sleeves with a 2,39 mm (0.094 in) wall thickness for shaft diameters greater than 200 mm (8 in) up to approximately 1150 mm (45 in). Two types are available on demand; the LDSLV3 with a flange and the flangeless LDSLV4.

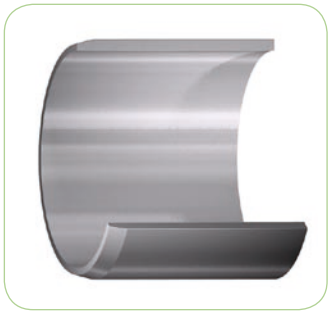

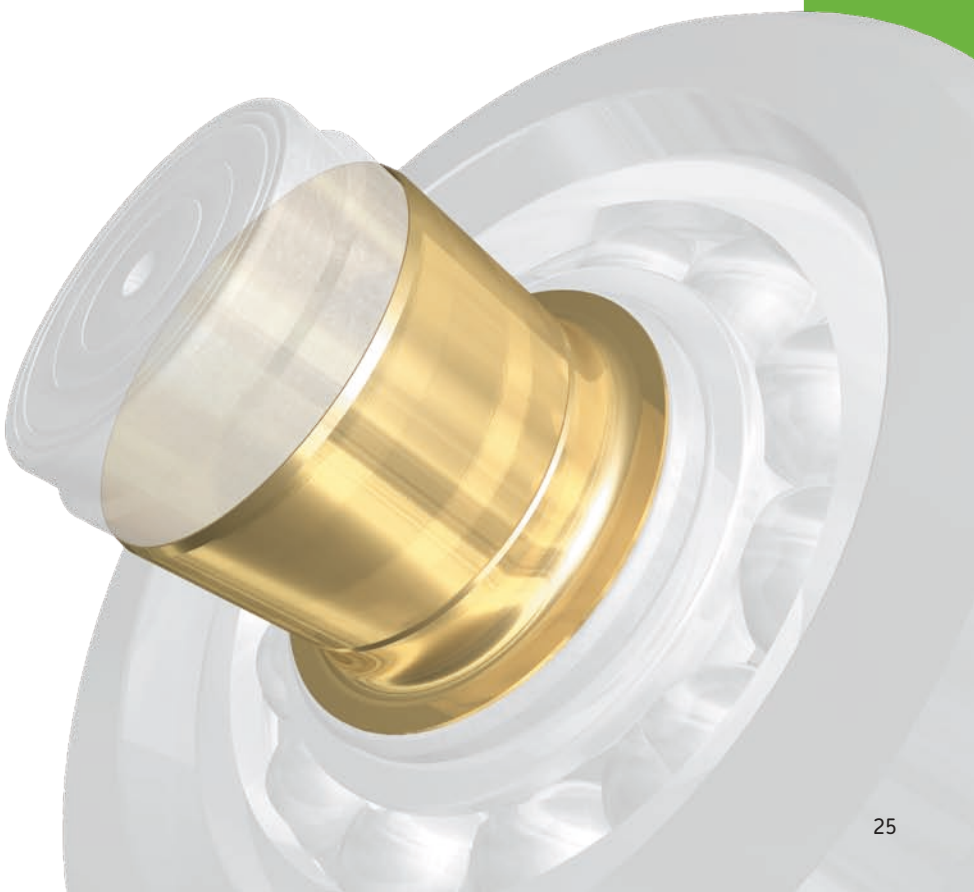

Axial shaft seals

Most axial shaft seals, like V-ring seals, are relatively simple sealing elements that are typically used as secondary seals in applications where the primary seals are subjected to large quantities of contaminants.

Axial shaft seals are available from SKF as

- V-ring seals
- Metal-cased V-type sealing rings and axial clamp seals
- Mechanical seals

With the exception of axial clamp seals, axial shaft seals rotate with the shaft and act as slingers. They tolerate small misalignments of the shaft with respect to the counterface and provide reliable sealing performance even if the shaft is out of round or rotates eccentrically.

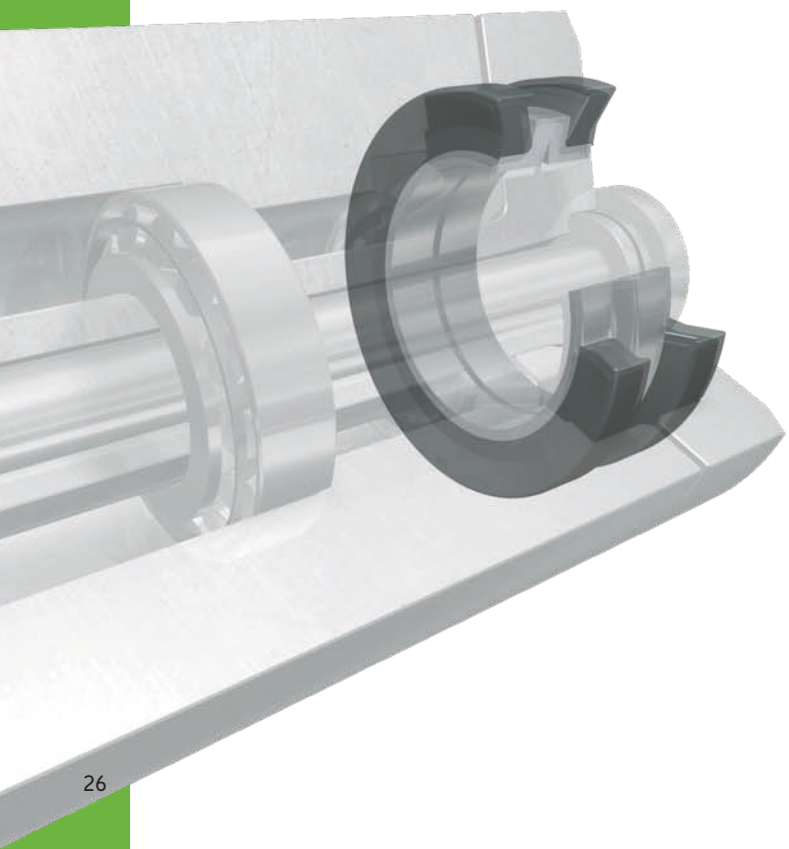

V-ring seals

V-ring seals are unique all-rubber seals for rotating shafts. They consist of a body and a conical shaped sealing lip that is joined to the body by means of a resilient “hinge”.

All V-rings are installed on and rotate with the shaft. Their lips seal axially against a counterface that is perpendicular to the shaft. The body has an interference fit on the shaft and holds the lip in position. V-rings can be stretched to fit over a flange during installation, which is a very valuable characteristic, especially in the case of seal replacement. They can operate at sliding velocities up to 8 m/s (1575 ft/min). At velocities above 8 up to 12 m/s (1575 to 2362 ft/min) V-rings must be axially located.

V-rings are used both to exclude water spray and solid contaminants, fig. a below, and to retain lubricants, fig. b. They can also act as a grease valve, fig. c.

V-ring seals are available in a wide variety of designs and sizes to fit the requirements of most applications. V-rings are normally made of nitrile rubber. For applications where higher temperatures occur, V-rings made of fluoro rubber should be used.

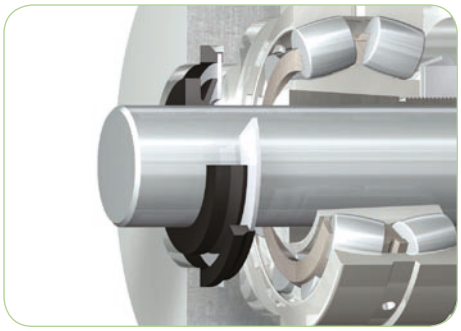

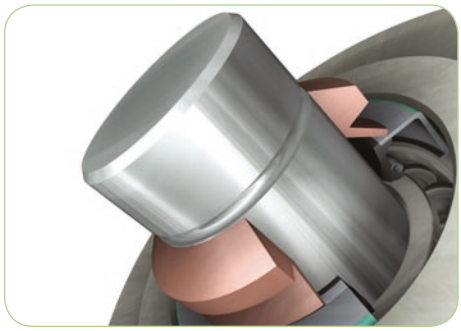

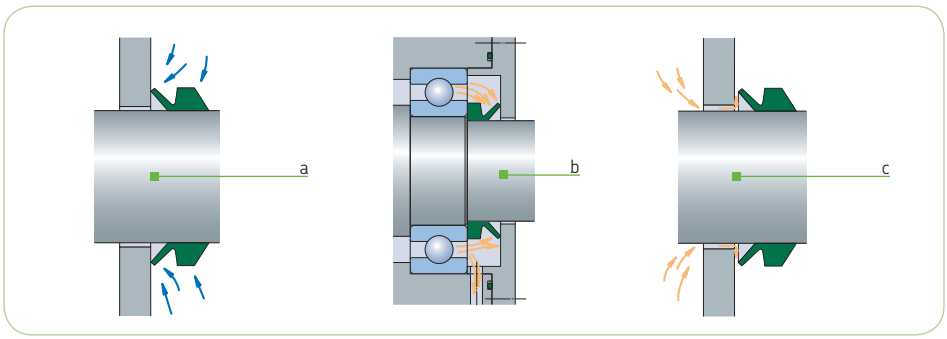

V-ring seals are available in four standard designs and two large-size, heavy-duty designs;

- VR1: Most common V-ring with a standard cross section and straight back-sideface.
- VR2: V-ring with a standard low cross section, tapered back face and wide body, providing a very firm hold on the shaft.
- VR3: Narrow V-ring with low cross section intended for use in compact sealing arrangements or labyrinth seals.
- VR4: Wide V-ring with high cross section designed as a secondary seal for heavy-duty applications where the primary seal has to be protected from water and/or solid contaminants. This seal permits the largest axial displacements.
- VR5: Wide, large diameter V-ring with low cross section. This seal can be axially located on the shaft using a standard clamping band. Primarily intended for large, high-speed applications, like rolling mills and paper mills.
- VR6: Heavy-duty, large diameter V-ring for applications including large axial displacements. This seal can be axially located on the shaft using a standard clamping band. Primarily intended for large, high-speed applications, like rolling mills and paper mills.

SKF V-ring seals are available for shaft sizes according to table below.



Design	VR1	VR2	VR3	VR4	VR5	VR6
min (mm)	2,7	4,5	105	300	450	300
min (in)	0.106	0.177	4.134	11.811	17.716	11.811
max (mm)	2 020	210	2 025	2 010	2 010	1 995
max (in)	79.257	8.268	79.724	79.134	79.134	78.543

Metal-cased V-type sealing rings and axial clamp seals

Series MVR and CT

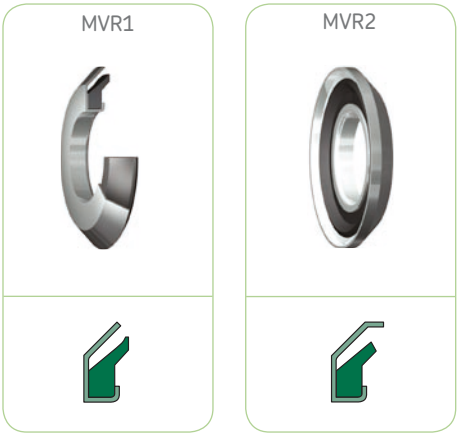

Metal-cased V-type sealing rings act as slingers and protect primary seals from coarse contaminants, dust and water spray to considerably extend the reliability and service life of sealing arrangements.

MVR V-type sealing rings from SKF consist of a metal case that houses a body and a conical shaped axial sealing lip made of nitrile rubber. The corrosion-resistant metal case protects the elastomeric sealing lip from contaminants. The seal has a tight fit in its seating and can accommodate speeds up to 12 m/s (2 362 ft/min) without auxiliary clamping devices.

There are two MVR types, the basic MVR1 and the MVR2 with case extension.

Series MVR is available for shaft diameters ranging from 10 to 200 mm (0.394 to 7.874 in) and can be used at temperatures between –30 and +100 °C (–20 and +210 °F).

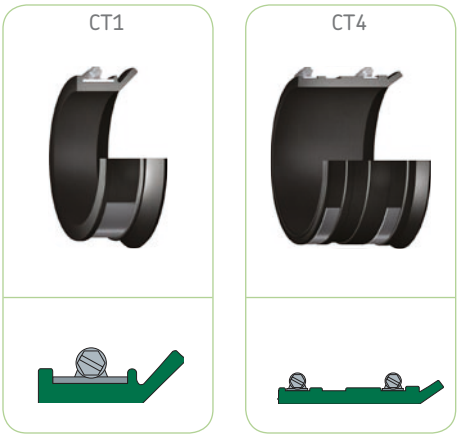

SKF axial clamp seals are designed for large diameter shafts. They do not rotate but seal axially against a rotating counterface.

The CT axial clamp seals are made of profiled strips of non-reinforced nitrile rubber and are held firmly in position by stainless steel band clamps. Axial clamp seals are available for shaft diameters ranging from 150 up to 4 600 mm (6 up to 181 in) and are produced in two different designs;

- CT1: Axial clamp seal that permits axial displacement with respect to the counterface of +2,4 mm (0.09 in).
- CT4: Axial clamp seal with an extra wide body that is held in position by two clamps. These seals can accommodate axial displacement with respect to the counterface of +4,8 mm (0.18 in).

HDDF





Mechanical seals

HDDF

Mechanical seals are designed for use under severe operating conditions at relatively low speeds. They offer reliable protection against solid and liquid contaminants as well as retention of lubricants. These seals were originally developed for off-road vehicles but have been found to be equally suitable for a wide range of other applications, where effective protection is required against sand, soil, mud water, etc.

SKF mechanical seals consist of two identical sealing rings and two similar Belleville washers (cup springs). The sealing rings are made of wear- and corrosion-resistant steel and have finely finished sliding and sealing surfaces. The Belleville washers made of nitrile rubber provide the necessary uniform face loading and positive sealing at the bore and outside diameters.

Permissible operating conditions

Operating conditions	Guideline values
Operating temperature, °C (°F)	
continuous operation	–50 to +100 (–60 to +210)
brief periods, maximum	+120 (+250)
Peripheral speed, m/s (ft/min)	
continuous operation	up to 1,75 (345)
brief periods, maximum	up to 4 (790)
Pressure acting on seal, MPa (psi)	
continuous operation	up to 0,2 (30)
brief periods, maximum	up to 0,35 (50)

Hydraulic seals

Hydraulic seals are designed to retain hydraulic fluids, exclude solid or liquid contaminants and maintain hydraulic pressure. These tasks require a variety of different seal designs and appropriate accessories. The SKF range of hydraulic seals is comprised of

- piston seals
- rod seals
- wiper seals
- guide rings and guide strips.

Hydraulic cylinders also require static sealing solutions like O-rings and back-up rings that are also offered by SKF.

On the following pages the different hydraulic seals are presented with a short description. Comprehensive technical product data can be found in the technical catalogue “Hydraulic seals”.

In addition to hydraulic seals, SKF also manufactures components for use in pneumatic cylinders. For additional information about these products, please contact your local SKF representative.

Hydraulic cylinder – terminology

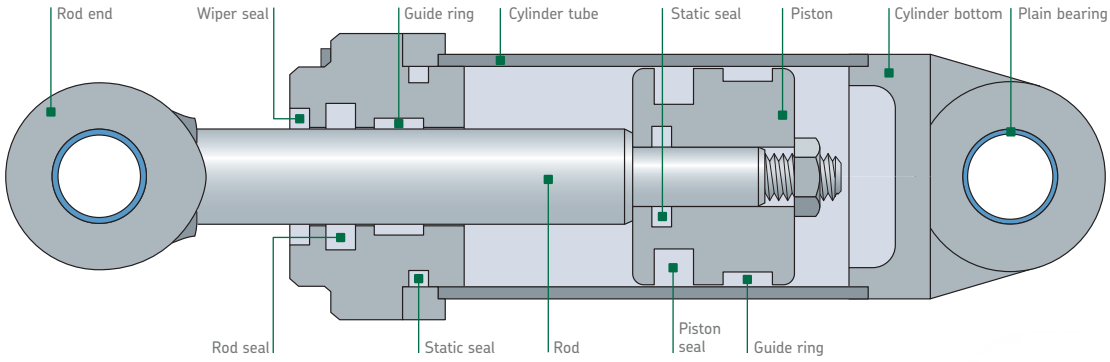

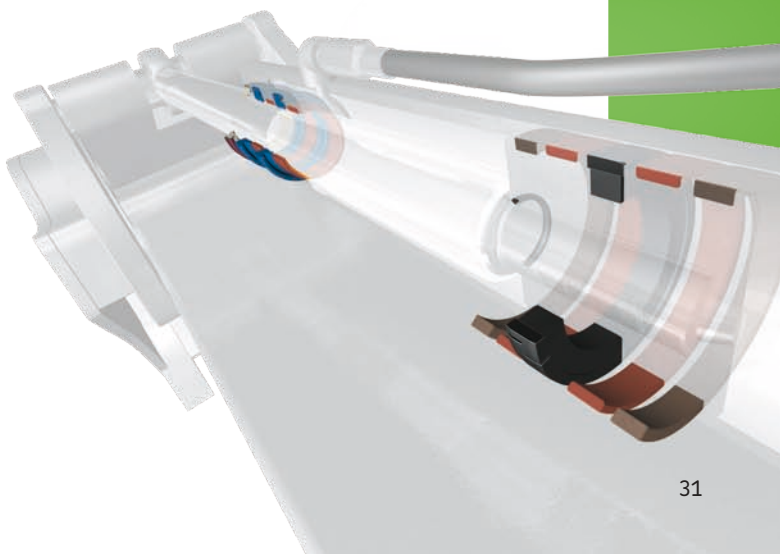

Material overview

The seal material has a significant impact on seal performance and reliability. To meet the needs of different applications, SKF hydraulic seals are produced in a variety of materials (see table below). The materials have individual properties that make them particularly suitable for specific applications.

The codes used to identify the seal material of SKF hydraulic seals are listed in the table below. The codes also appear in some seal designations.

Details about the physical properties and chemical resistance of each seal material in operation can be provided by your SKF representative.

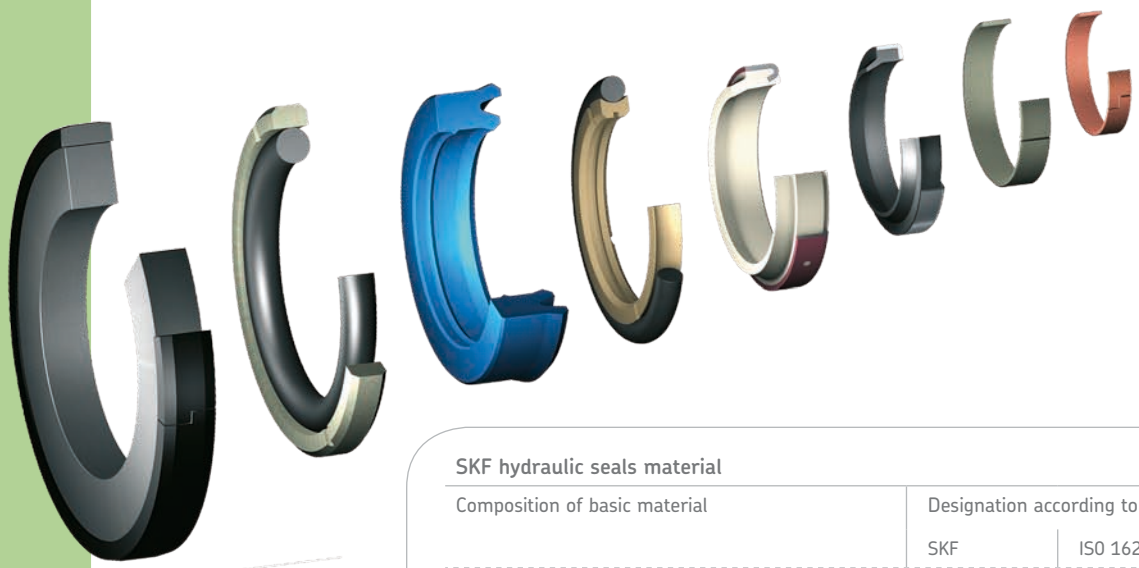

SKF hydraulic seals material

Composition of basic material	Designation according to	
	SKF	ISO 1629 / ASTM[1] D1418
Acrylonitrile-butadiene rubber (nitrile rubber)	N	NBR
Hydrogenated acrylonitrile-butadiene rubber	HN	HNBR
Fluoro rubber	F	FKM
Polytetrafluoroethylene	PTFE	PTFE
Polyurethane	PUR	PUR
Phenolic/fabric	PF	PF
Acetal resin	A	POM
Polyamide	PA	PA
Ethylene propylene diene monomer	E	EPDM
Ultra-high molecular weight polyethylene	PE-UHMW	PE-UHMW
Silicone rubber	Q	VMQ
Perfluoroalkoxy	PFA	PFA
Thermoplastic polyester elastomer	HY	TCP-ET

[1] American Society for Testing and Materials

IMPORTANT SAFETY NOTE: At temperatures above +300 °C (+570 °F), all fluoro elastomers and PTFE compounds give off dangerous fumes. If there is unintentional contact with your skin or if the vapours have been inhaled, a doctor should always be consulted.

Piston seals

The main function of a piston seal is to provide enough tightness in order to maintain the hydraulic pressure necessary to make the piston move. However, the piston seal must still allow a certain oil film to minimize friction and wear.

Choosing the appropriate piston seal for a given application is primarily dependent on how the cylinder operates. For cylinders that are exclusively single-acting, it is always best to choose a seal designed to provide optimum sealing qualities for single-acting functions with the thinnest possible lubrication film that can pass through the contact area between the seal and the cylinder tube surface.

A double-acting seal should be selected for a double-acting cylinder. A double-acting piston with two single-acting seals will typically result in premature seal failure. This is because very high pressure can be trapped between the seals causing them to blow out.

This catalogue describes both single- and double-acting piston seals with their main design features and operating capabilities. For comprehensive technical data and recommendations regarding proper seal selection, as well as for information about machining and installation, please see the technical catalogue “Hydraulic seals”.

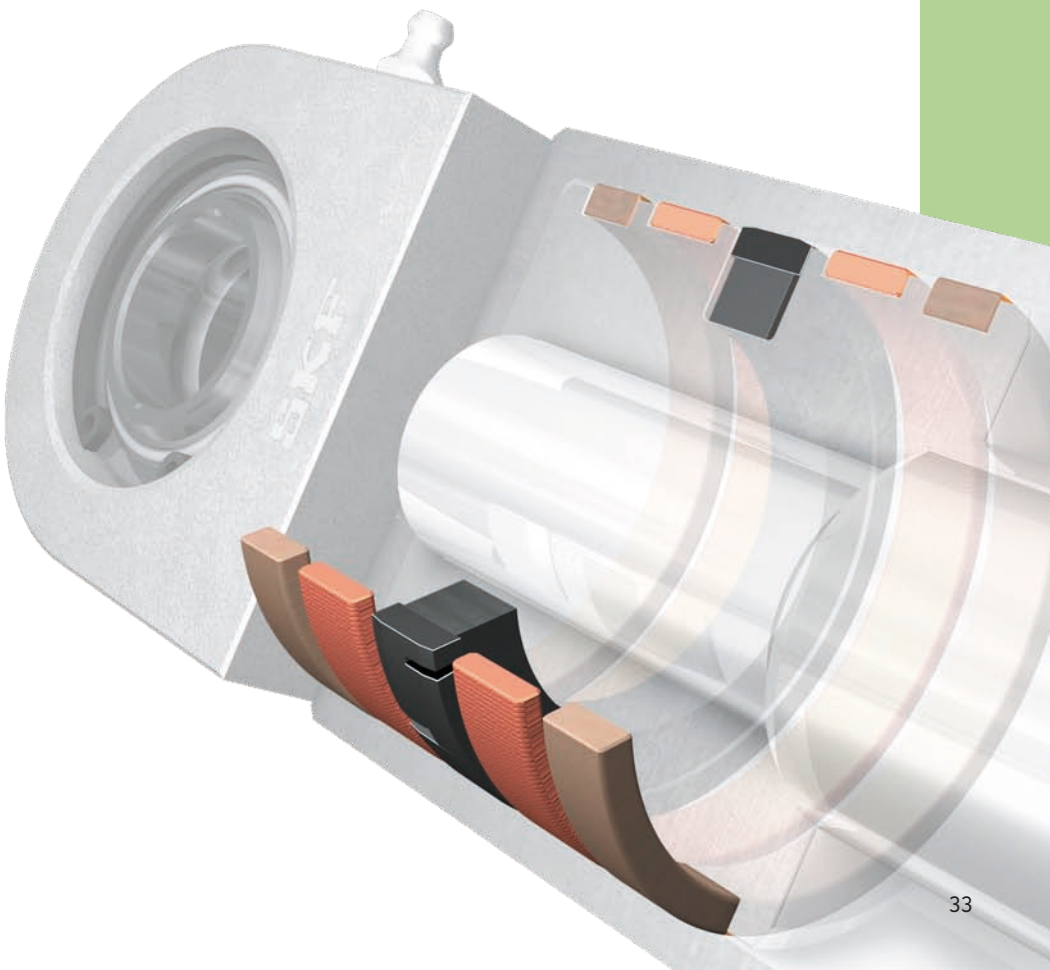

CUT





Double-acting piston seals type CUT consist of a step-cut slide ring of polyamide and a rectangular energizer of nitrile rubber. The material of the slide ring provides low friction even at high pressure and is very wear and extrusion resistant. The cut slide ring is very easy to install, even into a closed housing groove. The energizer offers excellent static sealing ability in the seal housing groove.

Type CUT is designed for use in heavy-duty hydraulic applications, mainly in double-acting cylinders with pressures up to 50 MPa (7 252 psi), short-term 100 MPa (14 504 psi), also at radial clearances of up to 0,5 mm (0.02 in). Type CUT is also available in a specific material combination withstanding even tougher operating conditions.

The piston seal type CUT provides a number of advantages:

- Fits into existing housing designs according to ISO 7425-1
- Only two parts to mount
- Equilateral – cannot be installed in wrong direction
- Split slide ring – no tool required
- Excellent compatibility with biodegradable oils

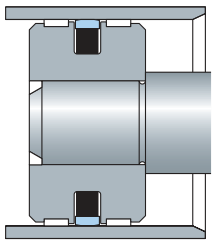

Installation example

GHTL



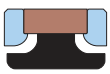

The double-acting piston seal type GHTL consists of a central slide ring, two support rings and one energizer. It is intended for use in hydraulic cylinders for medium and heavy-duty applications.

The GHTL is designed with an energizer of nitrile rubber, a slide ring of a filled PTFE material and two support rings of polyamide. The support rings are designed with a locking function to further secure the seal's position in the housing during installation. This feature also reduces the risk of incorrect installation.

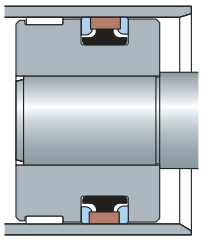

Installation example

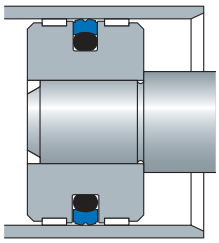

Installation example

Type PEN is a double-acting piston seal consisting of a slide ring of polyurethane and an energizer of nitrile rubber, enabling static sealing ability in the housing groove. The slide ring is designed with a radius on the static side for optimal function with the O-ring.

Type PEN is used in light- and medium-duty hydraulic applications and can be installed into closed housing grooves without any tools.

PEN





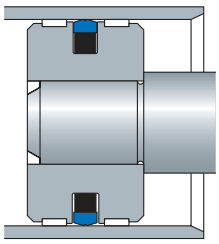

Installation example

Type URG is a double-acting piston seal consisting of a polyurethane slide ring and a square-cut energizer of nitrile rubber. The slide ring has chamfered sealing edges to obtain optimal tightness and resistance to extrusion. Its notches in the radial face enable rapid response to changes in the pressure direction.

URG seals are designed for medium-duty applications.

URG





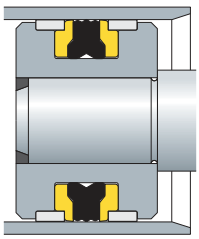

Installation example

Double-acting piston seals type MD-R are symmetrically designed and consist of a central sealing ring of nitrile rubber, support rings of a polyester elastomer and integrated guide rings of acetal resin.

Type MD-R has rectangular guide rings providing very good quiding performance and eliminating the risk of fatigue cracks.

The central sealing ring has three sealing edges to provide high sealing ability both statically and dynamically.

MD-R seals are used in a wide range of light- and medium-duty applications.

MD-R





Series G and GL

All types in the series G and GL consist of a dynamically sealing slide ring made of PTFE or other thermoplastic materials and a static, elastomeric part that functions as an energizer. They are available in different designs and material combinations to meet demands for low friction, small housing dimensions and long service life. The main difference between series G and GL is the slightly lower cross section of the GL slide ring. The basic slide ring material for series GL is unfilled PTFE, while the basic material for series G is a bronze-filled PTFE compound.



The table on page 37 indicates which seal type is appropriate for different application demands. Comprehensive technical data and selection criteria can be found in the technical catalogue “Hydraulic seals”.

Features, applications and choice of material

Features and field of application of SKF slide ring seals

GH	Basic design, double-acting, chamfered edges at the dynamic outside diameter to reduce the risk of extrusion, notches to avoid pressure build-up between slide ring and energizer.
G, GL	Double-acting, sharp edges at the dynamic outside diameter, recommended for use in light- or medium-duty hydraulic cylinders where impure media may occur.
GC, GLC	Double-acting, chamfered edges at the dynamic outside diameter to reduce the risk of extrusion.
GG, GLG	Double-acting, sharp edges at the dynamic outside diameter and a groove in the sliding surface for reduced friction.
GH-XX8	Double-acting, square-cut energizer providing improved load distribution against the dynamic surface.
GN	Double-acting, notches in both side faces, recommended for cylinders with rapid pressure changes.
GR	Double-acting, chamfered edges at the dynamic outside diameter, a groove in the sealing surface and notches in both side faces. Additionally the slide ring has a radius on the static side for optimal function together with an O-ring. Recommended for applications where additional rotating or slewing movements may occur.
GS	Single-acting, recommended for applications with high demands on sealing ability.

Choice of material

Medium	Material contact surface	Slide ring material	O-ring material
Hydraulic oil Lubrication oil (mineral oil based)	Steel: min 33 HRC Chromed surface, cast iron	1) PTFE + bronze 2) PTFE + glass fibre 3) PE-UHMW	N N N
	Stainless steel, aluminium, anodized or chromed bronze	1) PTFE + carbon 2) PTFE + carbon fibre 3) PE-UHMW	F F F
Water Water/glycol	Steel: min 33 HRC Chromed surface, cast iron, stainless steel, aluminium, anodized or chromed bronze	1) PTFE + carbon 2) PTFE + carbon fibre 3) PE-UHMW	N F F
Water/oil emulsion			
Hot water/steam	Steel: min 33 HRC Chromed surface, cast iron, stainless steel, aluminium, anodized or chromed bronze	1) PTFE + carbon 2) PTFE + carbon fibre	E E
Air, lubricated service Air, non-lubricated service	Steel: min 33 HRC Chromed surface, cast iron	1) PE-UHMW 2) PTFE + glass fibre 3) PTFE + low-filled + colour pigment, only lubricated service	N N N
	Stainless steel, aluminium, anodized or chromed bronze	1) PE-UHMW 2) PTFE + carbon 3) PTFE + carbon fibre	N N N

More information on choice of material combinations can be found in the catalogue “Hydraulic seals”.

SA





Type SA is a single-acting, asymmetric U-ring seal made of polyetherurethane.

SA seals are used in light- and medium-duty applications.

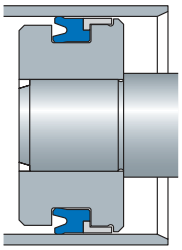

Installation example

SUA





Seals in the SU series are single-acting PTFE seals, preloaded by stainless steel springs. They are used as dynamic seals for slowly rotating or reciprocating movements or as static seals.

SU seals can often be used to replace rubber seals, such as an O-ring, in applications with very high or low temperatures, non-lubricated services, demands on low friction, aggressive media, high speeds, high pressures, vacuum etc. Series SU can be manufactured with many different spring types and in various materials to meet specific application demands. The most commonly used SU seals are:

- SUA: asymmetrical design with a wiper lip
- SUD: asymmetrical design with a strong dynamic lip
- SUS: symmetrical design for static applications

SUD





SUS





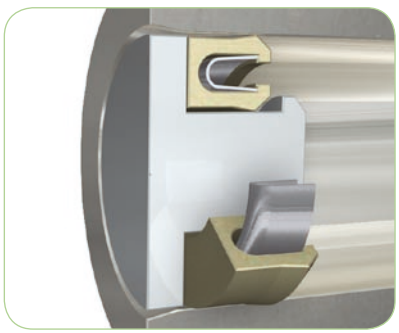

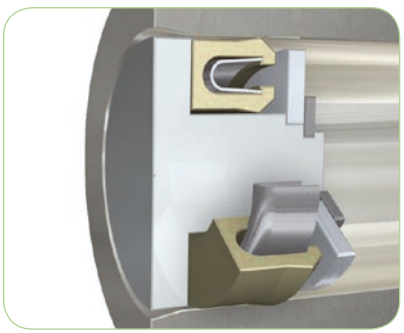

Permissible operating conditions

Seal type	Seal material	Maximum pressure MPa *psi*	Maximum linear velocity m/s *ft/min*	Temperature range °C *°F*	Page
CUT	PA, N	50 7250	1 200	–30 / +110 –20 / +230	34
GHTL	PTFE PA, N	40 5800	2 395	–30 / +110 –20 / +230	34
PEN	PUR, N	25 3626	0,5 100	–30 / +90 –20 / +195	35
URG	PUR, N	25 3625	0,5 100	–30 / +90 –20 / +195	35
MD-R	N, A, HY	25 3625	0,5 100	–30 / +100 –20 / +210	35
GL, GLC, GLG	PTFE	16 2320	2 395	–30 / +110 –20 / +230	36
GC, G, GG, GN, GS, GH-XX8, GH, GR	PTFE	25 3625	2 395	–30 / +110 –20 / +230	36
SA	PUR	25 3625	0,5 100	–30 / +90 –20 / +195	38
SUA	PTFE + Stainless steel	25 3625	15 2950	–200 / +260 –330 / +500	38
SUD	PTFE + Stainless steel	25 3625	15 2950	–200 / +260 –330 / +500	38
SUS	PTFE + Stainless steel	25 3625	- -	–200 / +260 –330 / +500	38

Please note that the values stated above should be considered as guidelines only and not as absolute values for practical applications.

Piston seals, selection matrix

Please select the most important factor when choosing seal design.

Then study further factors, installation instructions and dimension tables in the technical catalogue “Hydraulic seals”.

The number 5 in the matrix represents the most appropriate design while the number 1 represents the least appropriate.

									
Type/series		CUT	GHTL	GH	GL	PEN	URG	MD-R	SA
Material		PA N	PTFE N PA	PTFE N	PTFE N	PUR N	PUR N	N A HY	PUR
Single-acting									X
Double-acting		X	X	X	X	X	X	X	
Pressure, up to	16 MPa (2 321 psi)	5	5	5	5	5	5	5	5
	25 MPa (3 626 psi)	5	5	5	3	5	5	4	5
	40 MPa (5 802 psi)	5	5	3	1	3	3	1	3
High temperature	< +110 °C (+230 °F)	5	5	5	5	4	4	5	4
Low temperature	> −30 °C (−22 °F)	5	5	5	5	4	4	4	3
Friction	pressure = 0	5	5	5	5	5	5	4	4
	pressure > 0	5	5	5	5	5	5	4	4
Surface insensitivity		5	4	4	4	5	5	4	5
Tolerance insensitivity		5	5	4	4	5	5	4	5
Ease of installation		5	3	4	4	5	5	4	5
Sealing ability	pressure = 0	5	5	5	4	4	5	5	5
	pressure > 0	5	5	5	4	3	5	5	5
Preferred in new designs		X	X	X	X		X	X	
									

Rod seals

The rod seal is the seal in the hydraulic cylinder with the most demanding specifications. In addition to normal wear and ageing, this seal is directly affected by irregularities on the rod surface. The rod seal is often the decisive factor in the functioning of the hydraulic cylinder. Leakage through the rod seal can cause accidents and environmental damage. Therefore, to find an optimal solution, it is extremely important to select the correct seal and be familiar with the properties of other seal types in the rod sealing system.

The rod seal's task is very difficult since it must seal at both high and low pressure, often in combination with alternating high and low temperatures. The rod seal must leave a certain oil film, thin enough to return into the cylinder after having passed an effective wiper seal. When choosing a rod seal, it is important to define the area of application and to make selection analyses with the support of carefully defined specifications. Rod seals are produced in several different designs in order to function under various operating conditions.

This publication presents the standard range of SKF rod seals with their main design features and operating conditions. For comprehensive technical data and recommendations about proper seal selection, as well as for information about machining and installation, please see the technical catalogue "Hydraulic seals".

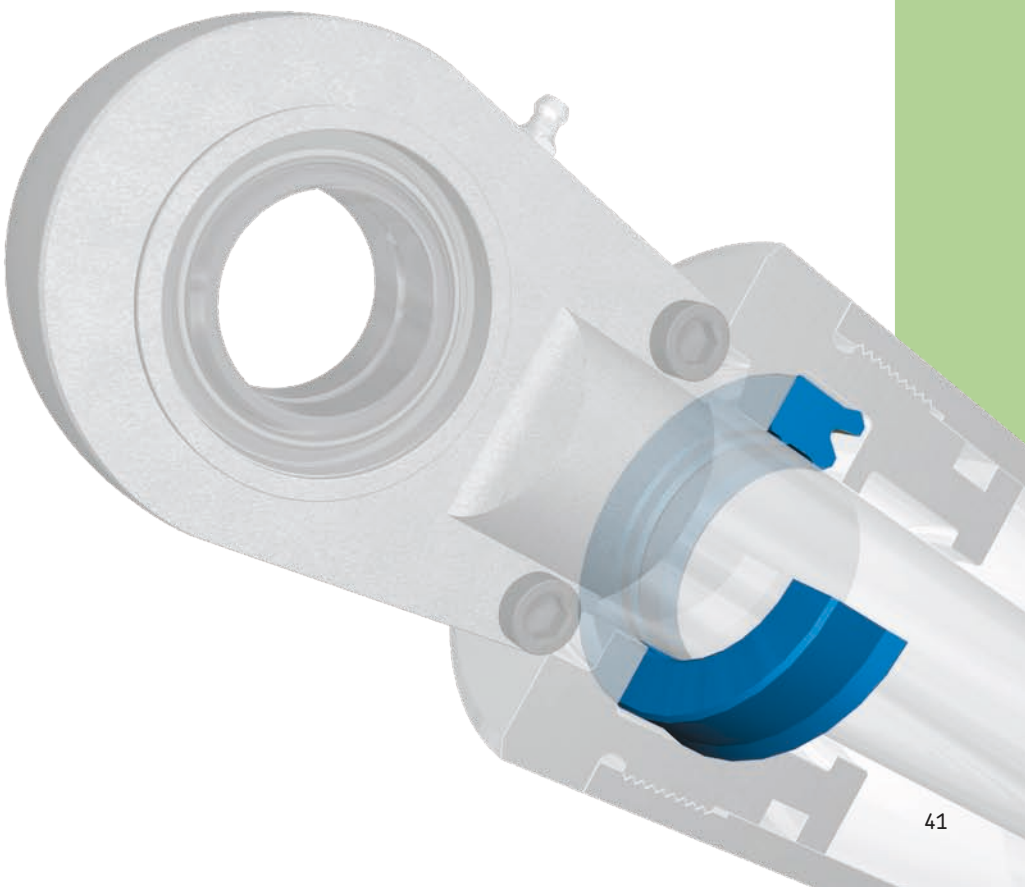

SIL





TIL





Type SIL of polyurethane is a general-purpose rod seal. This seal is designed with an asymmetrical cross section with a short and strong dynamic sealing lip in order to provide good sealing performance also at zero-pressure conditions. The outer seal lip is slightly longer and slimmer than the inner lip in order to effectively seal statically during radial and axial movements at both low and high temperatures.

Type TIL of polyurethane is designed with short and strong sealing lips providing a good contact force towards the surface of the seal housing groove. Type TIL is more compact than type SIL and is well suited for small radial sections, i.e. 4 to 6 mm (0.039 to 0.236 in). This seal type retains good sealing performance under low- or zero-pressure conditions.

The SIL and TIL seals are designed with a secondary sealing edge that reduces the contact surface towards the rod.

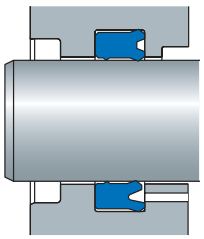

Installation example

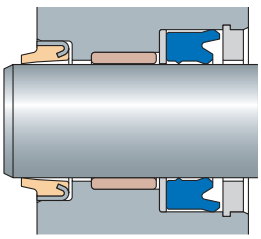

Installation into open groove

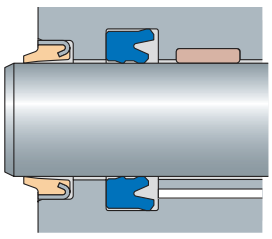

Installation into closed groove

SG





Type SG is a compact rod seal of fabric-reinforced nitrile rubber. The integrated support ring of acetal resin prevents extrusion into the clearance.

Type SG is designed for use in applications operating within the temperature range of –30 to +100 °C (–20 to +210 °F). This seal is also an appropriate choice for applications where a water-based hydraulic media contains oil or glycol. In these applications, type SG can accommodate temperatures ranging from –30 to +70 °C (–20 to +160 °F).

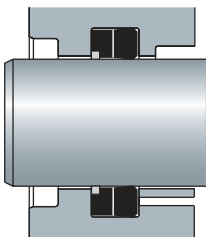

Installation example

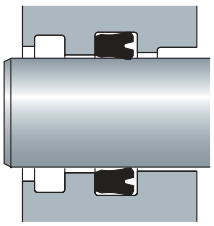

Installation example

Type SKY is a symmetric U-ring seal of nitrile rubber, designed for applications with small radial sections or as replacement seals for older hydraulic equipment. The seal type is also available in fluoro rubber on request.

Type SKY is preferably combined with a support ring of PTFE at pressures over 14 MPa (2 030 psi).

SKY





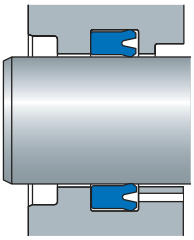

Installation example

Type UN is a symmetric U-ring seal of polyurethane, typically used as replacement seal for older hydraulic equipment. For newly designed applications, the technically more advanced SIL and TIL seals should be used.

UN





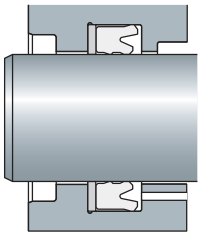

Installation example

The SKF product range also includes accessories for rod sealing systems.

Type STR-D/A is a support ring made of acetal resin for rod seals with the same sectional dimension as the rod seal. The support ring protects the seal from extruding into the clearance. This allows a larger clearance, which in turn reduces the risk of metal-to-metal contact between the cylinder components.

The basic design is split to facilitate installation to the back-sideface of the seal.

STR-D/A





SUA





Seals in the SU series are single-acting PTFE seals, preloaded by stainless steel springs. They are used as dynamic seals where there is slowly rotating or reciprocating movement and as static seals.

SU seals can often be used to replace rubber seals, e.g. O-rings, in applications with very high or low temperatures, non-lubricated services, demands for low friction, aggressive media, high speeds, high pressures, vacuum etc. Series SU can be manufactured with many different spring types and in various materials adjusted to the application demands. The most commonly used SU seals are:

- SUA: asymmetrical design with a wiper lip
- SUD: asymmetrical design with a strong dynamic lip
- SUS: symmetrical design for static applications

SUD





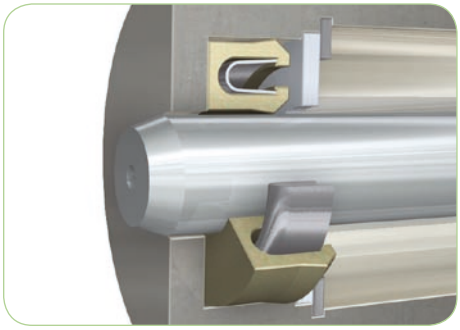

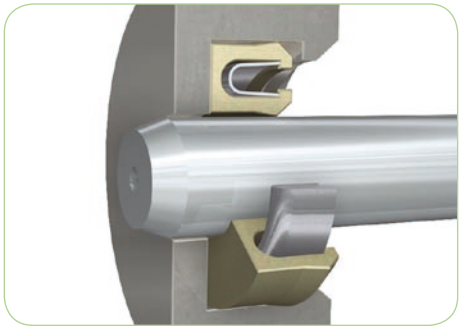

SUS





Series G and GL

All types in the series G and GL consist of a dynamically sealing slide ring made of PTFE or other thermoplastic materials and a static, elastomeric part that functions as an energizer. They are available in different designs and material combinations to meet demands for low friction, small housing dimensions and long service life. The main difference between series G and GL is the slightly lower cross section of the GL slide ring. The basic slide ring material for series GL is unfilled PTFE, while the basic material for series G is a bronze-filled PTFE compound.

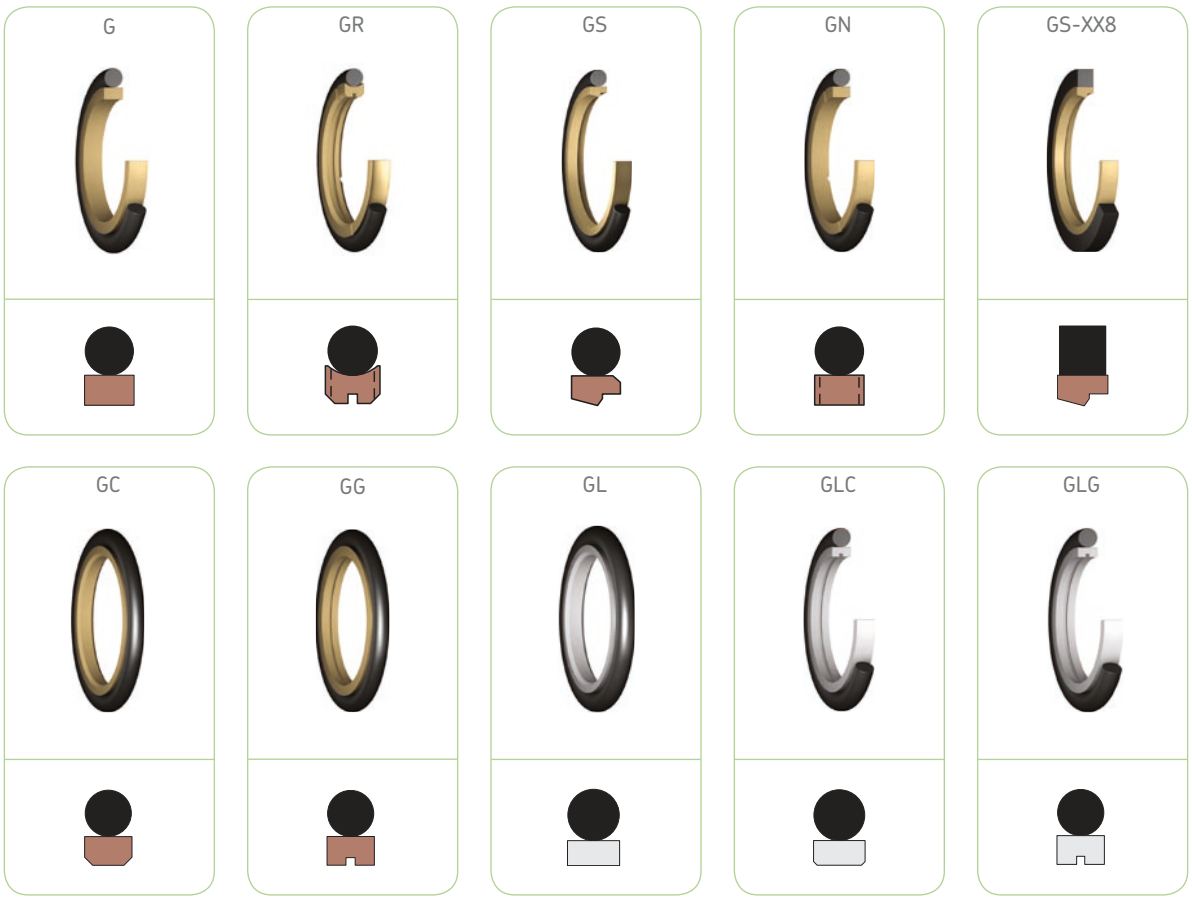

The table on page 46 indicates which seal type is appropriate for different application demands. Comprehensive technical data and selection criteria can be found in the technical catalogue "Hydraulic seals".

Features, applications and choice of material

Features and field of application of SKF slide ring seals

G, GL	Double-acting, sharp edges at the dynamic outside diameter, recommended for use in light- or medium-duty hydraulic cylinders where impure media may occur.
GC, GLC	Double-acting, chamfered edges at the dynamic outside diameter to reduce the risk of extrusion.
GG, GLG	Double-acting, sharp edges at the dynamic outside diameter and a groove in the sliding surface for reduced friction.
GS-XX8	Single-acting, square-cut energizer providing improved load distribution against the dynamic surface.
GN	Double-acting, notches in both side faces, recommended for cylinders with rapid pressure changes.
GR	Double-acting, chamfered edges at the dynamic outside diameter, a groove in the sealing surface and notches in both side faces. Additionally the slide ring has a radius on the static side for optimal function together with an O-ring. Recommended for applications where additional rotating or slewing movements may occur.
GS	Single-acting, recommended for applications with high demands on sealing ability.

Choice of material

Medium	Material contact surface	Slide ring material	O-ring material
Hydraulic oil Lubrication oil (mineral oil based)	Steel: min 33 HRC Chromed surface, cast iron	1) PTFE + bronze 2) PTFE + glass fibre 3) PE-UHMW	N N N
	Stainless steel, aluminium, anodized or chromed bronze	1) PTFE + carbon 2) PTFE + carbon fibre 3) PE-UHMW	F F F
Water Water/glycol	Steel: min 33 HRC Chromed surface, cast iron, stainless steel, aluminium, anodized or chromed bronze	1) PTFE + carbon 2) PTFE + carbon fibre 3) PE-UHMW	N F F
Water/oil emulsion			
Hot water/steam	Steel: min 33 HRC Chromed surface, cast iron, stainless steel, aluminium, anodized or chromed bronze	1) PTFE + carbon 2) PTFE + carbon fibre 3) PTFE + carbon	E E E
Air, lubricated service Air, non-lubricated service	Steel: min 33 HRC Chromed surface, cast iron	1) PE-UHMW 2) PTFE + glass fibre 3) PTFE + low-filled + colour pigment, only lubricated service	N N N
	Stainless steel, aluminium, anodized or chromed bronze	1) PE-UHMW 2) PTFE + carbon 3) PTFE + carbon fibre	N N N

More information on choice of material combinations can be found in the catalogue “Hydraulic seals”.

Permissible operating conditions

Seal type	Seal material	Maximum pressure MPa *psi*	Maximum linear velocity m/s *ft/min*	Temperature range °C *°F*	Page
SIL	PUR	40 5 800	0,5 100	–30 / +90 –20 / +195	42
TIL	PUR	40 5 800	0,5 100	–30 / +90 –20 / +195	42
SG	N, A	25 3 625	0,5 100	–30 / +100 –20 / +210	42
SKY	N	14 2 030	0,5 100	–30 / +100 –20 / +210	43
SKY + support ring	N + PTFE	25 3 625	0,5 100	–30 / +100 –20 / +210	43
UN	PUR	40 5 800	0,5 100	–30 / +90 –20 / +195	43
STR-D/A	A	40 5 800	0,5 100	–30 / +100 –20 / +210	43
SUA	PTFE + Stainless steel	25 3 625	15 2 950	–200 / +260 –330 / +500	44
SUD	PTFE + Stainless steel	25 3 625	15 2 950	–200 / +260 –330 / +500	44
SUS	PTFE + Stainless steel	25 3 625	15 2 950	–200 / +260 –330 / +500	44
GL, GLC, GLG	PTFE, N	16 2 320	2 395	–30 / +100 –20 / +210	45
GC, G, GG, GN, GS, GS-XX8, GR	PTFE, N	25 3 625	2 395	–30 / +100 –20 / +210	45

Please note that the values stated should be considered as guidelines only and not as absolute values for practical applications.

Rod seals, selection matrix

Please select the most important factor when choosing seal design.

Then study further factors, installation instructions and dimension tables in the technical catalogue “Hydraulic seals”.

The number 5 in the matrix represents the most appropriate design while the number 0 represents the least appropriate.

								
Type/series		SIL	TIL	UN	GS	SG	SKY	GL
Material		PUR	PUR	PUR	PTFE N	N A	N	PTFE N
Pressure, up to	16 MPa (2 321 psi) 25 MPa (3 626 psi) 40 MPa (5 802 psi)	5 5 4	5 5 4	4 3 2	5 5 4	5 5 4	4 2 0	5 3 1
High temperature Low temperature	< +110 °C (+230 °F) > −30 °C (−22 °F)	4 5	4 5	4 3	5 5	5 4	5 4	5 5
Friction	pressure = 0 pressure > 0	4 4	4 4	4 3	5 5	3 3	5 4	5 5
Surface insensitivity		5	5	5	3	3	3	3
Tolerance insensitivity		5	5	5	4	5	4	4
Service life		5	5	5	4	4	3	4
Ease of installation		5	5	5	3	4	5	3
Sealing ability	pressure = 0 pressure > 0	4 5	4 5	3 4	4 4	5 4	5 5	4 3
Preferred in new designs		X	X		X			









Wiper seals

Contaminants in the hydraulic system are the most common cause of breakdowns and premature seal failure. The majority of contaminants enter the system through the rod. The wiper seal's purpose is to prevent this.

The wiper seal is the most underrated seal in the hydraulic cylinder relative to its importance. The selection of a wiper seal should be based on the same carefully defined specifications as the selection of piston and rod seals. The surrounding environment and service conditions must be taken into special consideration.The wiper seal should be designed not only to fit the rod (dynamic function) but also to seal in the housing groove (static function).

This publication presents the standard range of SKF wiper seals with their main design features and operating conditions. For comprehensive technical data and recommendations about proper wiper seal selection as well as for information about machining and installation, please see the technical catalogue "Hydraulic seals".

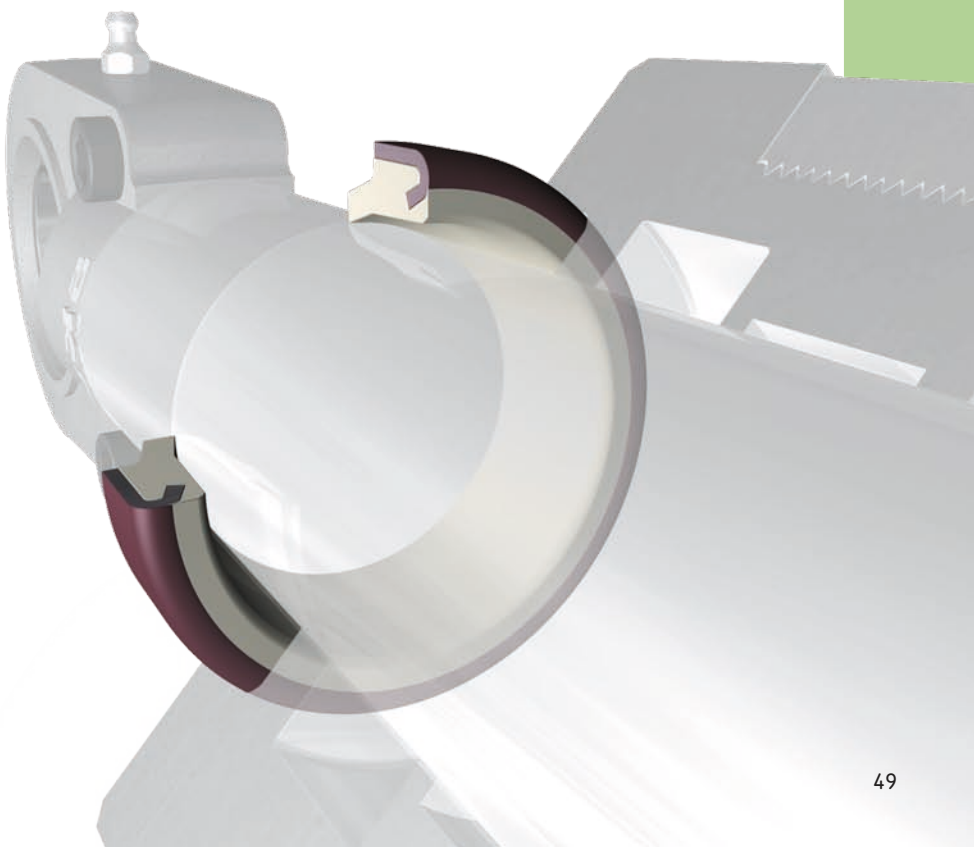

PA



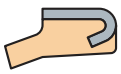

Type PA is a single-acting wiper seal made of polyurethane with a metal case for press fit installation. Thanks to the design of the wiper lip and the specifically chosen material, a high and durable contact force is achieved. The metal case provides a very high rigidity close to the bottom of the housing for optimal fixation. Type PA is a very effective wiper seal type for demanding applications.

Type PAK is a single-acting wiper seal made of polyurethane with a metal case for press fit installation. Unlike type PA, type PAK has the same width as the housing groove, which enables this type to also seal bushings.

Type PAD is a double-acting wiper seal made of polyurethane with a metal case for press fit installation. Thanks to its U-shape it also has a sealing function to further reduce the oil transport passing the rod seal. Type PAD is designed for heavy-duty applications. Type PAD can be complemented with a retainer ring to withstand very tough service conditions.

Metal-cased wiper seal types are intended for installation into open housings.

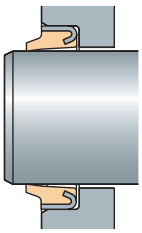

Installation example

PAK





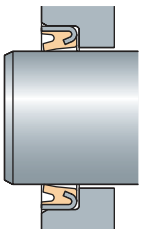

Installation example

PAD



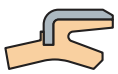

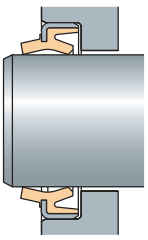

Installation example

For less demanding applications, metal-cased wiper seals made of an elastomeric material, normally nitrile rubber 80° IRH, are used.

Type GA is a metal-cased, single-acting wiper seal made of nitrile rubber for press fit installation. Type GA can also be manufactured of fluoro rubber on request. Type GA is used in light- or medium-duty applications.

Type SCB is a double-acting, metal-cased wiper seal made of nitrile rubber for press fit installation. Type SCB can also be made of fluoro rubber on request. Type SCB is used in medium-duty applications, but can be combined with a retainer ring to withstand even tougher conditions.

GA





SCB





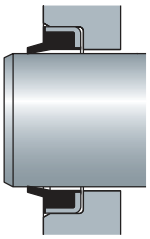

Installation example

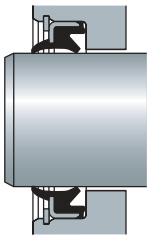

Installation example

Type PO2 is a double-acting PTFE wiper seal with an energizing O-ring made of nitrile rubber providing the static sealing function. The O-ring is also available in other rubber materials, e.g. fluoro rubber.

Type PO is a single-acting PTFE wiper seal with an energizing O-ring made of nitrile rubber providing the static sealing function. The O-ring is also available in other rubber materials, e.g. fluoro rubber.

Both types are designed for use in applications with aggressive media, high temperatures or specific demands for low friction. For newly designed applications, type PO2 is preferable.

PO2





PO





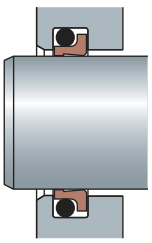

Installation example

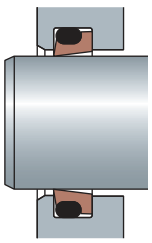

Installation example

PWY





Type PWY is a single-acting wiper seal made of polyurethane to be installed into closed housings.

This type has an outward-directed sealing lip that rests against the retainer diameter to provide improved static sealing ability in the housing. The wiper body is also equipped with radial ridges to prevent the wiper seal from being distorted.

PWB





Type PWB is a single-acting wiper seal made of polyurethane to be installed into closed housings.

This type has an axial static sealing edge on the front face of the wiper body to keep it in place in the housing and axial ridges on the inside diameter to prevent the wiper seal from being distorted.

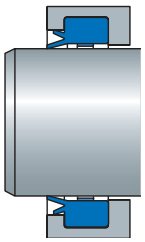

Installation example

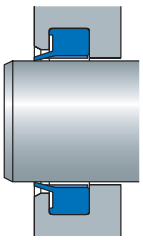

Installation example

Permissible operating conditions

Seal type	Seal material	Maximum linear velocity m/s *ft/min*	Temperature range °C °F	Page
PA	PUR	2 395	–30 / +90 –20 / +195	50
PAK	PUR	2 395	–30 / +90 –20 / +195	50
PAD	PUR	2 395	–30 / +90 –20 / +195	50
GA	N	2 395	–30 / +100 –20 / +210	51
SCB	N	2 395	–30 / +100 –20 / +210	51
P02	PTFE, N	15 2 950	–40 / +110 –40 / +230	51
P0	PTFE, N	15 2 950	–40 / +110 –40 / +230	51
PWY	PUR	2 395	–30 / +90 –20 / +195	52
PWB	PUR	2 395	–30 / +90 –20 / +195	52

Please note that the values stated should be considered as guidelines only and not as absolute values for practical applications.

Wiper seals, selection matrix

Please select the most important factor when choosing seal design.

Then study further factors, installation instructions and dimension tables in the technical catalogue “Hydraulic seals”.

The number 5 in the matrix represents the most appropriate design while the number 3 represents the least appropriate.

										
Type/series		PA	PAK	PAD	GA	SCB	PWY	PWB	P02	P0
Material		PUR	PUR	PUR	N	N	PUR	PUR	PTFE	PTFE
High temperature, up to	+110 °C (+230 °F)	4	4	4	4	4	4	4	5	5
Low temperature, down to	−30 °C (−20 °F)	5	5	5	4	4	5	5	4	4
Friction		4	4	3	4	4	4	4	5	5
Surface insensitivity		5	5	5	4	4	5	5	3	3
Tolerance insensitivity		4	4	4	4	4	4	4	3	3
Service life		5	5	5	3	3	4	4	3	3
Ease of installation		4	4	4	4	4	5	5	3	3
Fixiation in the housing		5	5	5	4	5	4	4	4	4
Wiping ability		5	4	5	3	4	4	4	4	4
Static sealing in the housing		5	5	5	5	5	5	4	5	5
Preferred in new designs		X	X	X	X		X	X	X	











Guides

Plastic guide rings and guide strips guide the piston in the cylinder bore and the rod in the cylinder head. They also accommodate side loads and prevent metal-to-metal contact between these axially mobile parts.

SKF recommends the materials phenolic/fabric, acetal resin or PTFE for guides, depending on the application.

	Guide types for rod	Guide types for piston
Phenolic/fabric	RGR-PF	PGR-PF
Acetal resin	RGR-A	PGR-A
PTFE	SB, SB/C	SB, SB/C

Application field	Phenolic/fabric	Acetal resin	PTFE
Mobile hydraulics	x		
Agricultural hydraulics		x	
Industrial hydraulics	x	x	x
Process hydraulics			x
Water hydraulics			x
Food industry hydraulics			x

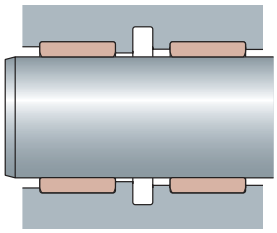

Installation example for rods

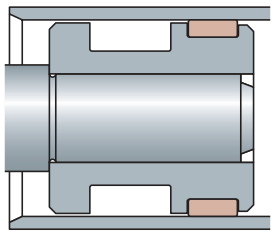

Installation example for pistons

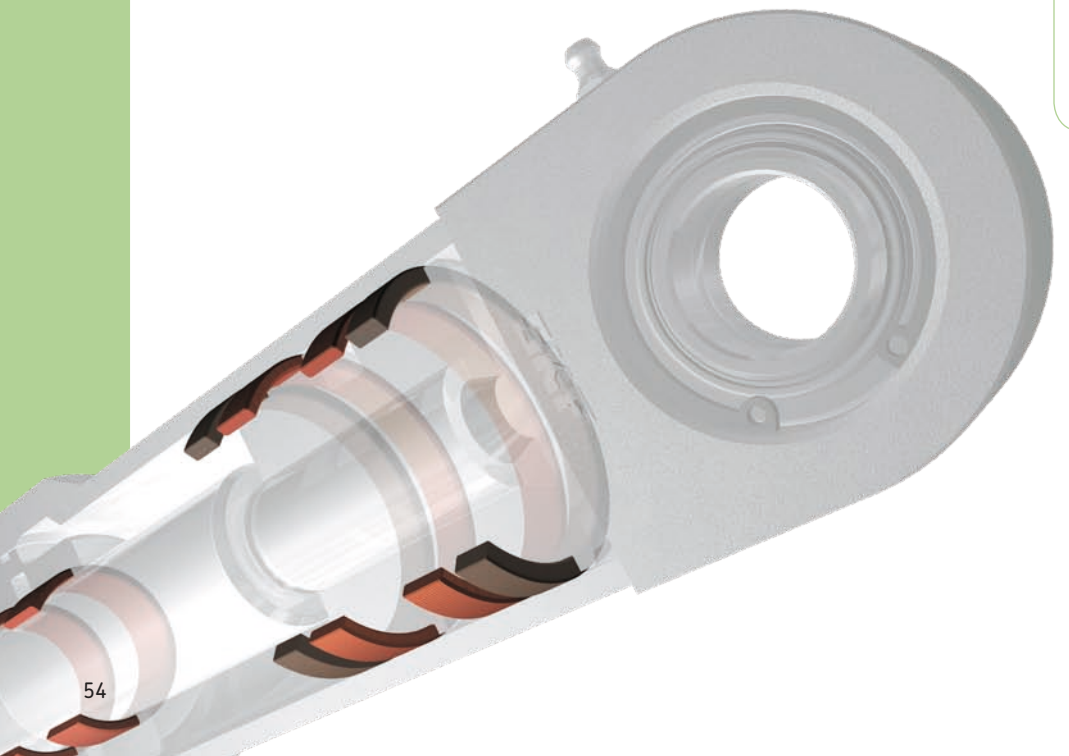

Static seals

The O-ring, one of the most common sealing devices, is used in a variety of different applications. The design is unique with its ingenious simplicity. The O-ring seals through its deformation between the surfaces which it is supposed to seal. The working pressure at which the O-ring can be used is dependent on, among other things, the installation method, fitting clearance, the O-ring material, sealed medium and temperature. O-rings of a hard material generally provide an inferior sealing ability at low pressures due to significant permanent deformation.

O-rings are often used as static sealing elements in hydraulic systems. However, they tend to extrude into the clearance already at low pressures and are thereby destroyed. An appropriate solution is to combine the O-ring with one or two back-up ring(s).

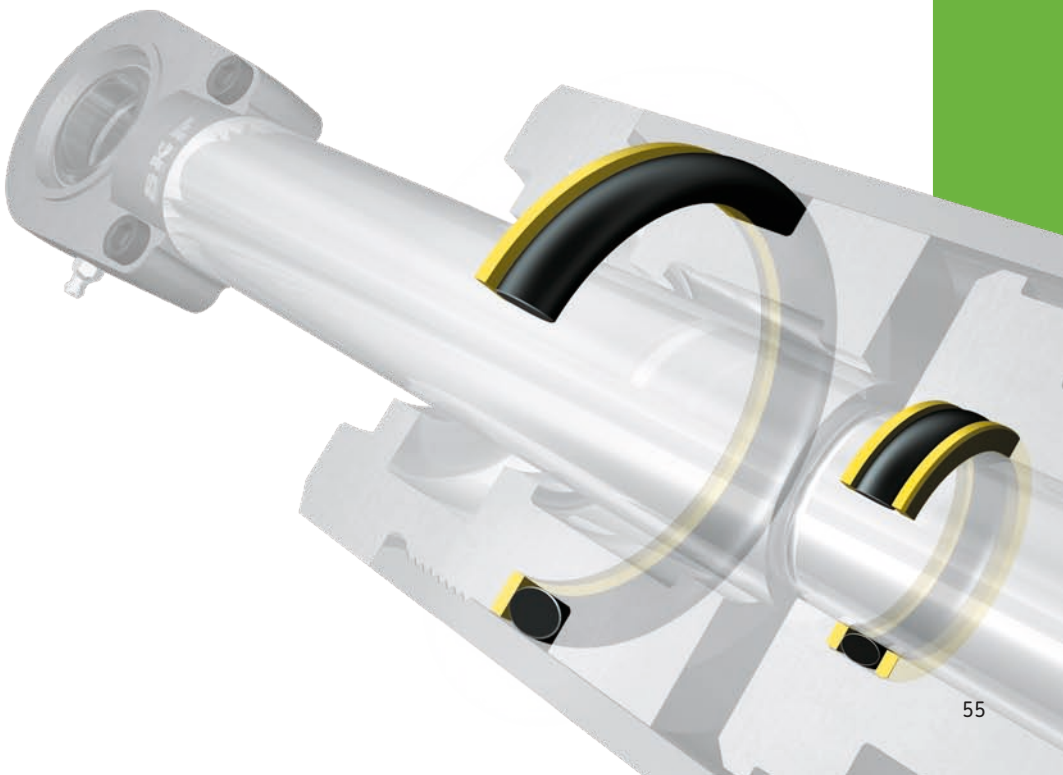

OR





ECOR





O-rings

SKF normally stocks standard O-rings made of nitrile rubber 70° IRH. When necessary, O-rings with the alternative hardness 90° can be manufactured upon request. It is, however, better to choose 70° IRH and combine the O-ring with a back-up ring when enough space is available.

For applications with temperatures over +100 °C (+210 °F), O-rings made of rubber or silicone rubber are appropriate, depending on the medium.

In the catalogue, “Hydraulic seals”, you will find a wide range of O-ring sizes and fundamental technical information. Detailed information about O-ring sizes and tolerances, installation instructions and, in some cases, material properties are found in common national and international standards, e.g. SMS 1586 and ISO 3601.

Type ECOR is an O-ring consisting of a seamless and uniform PTFE encapsulation that completely encloses the core material of either silicone or fluoro rubber to protect it from media and air.

The function is the same as that of a normal O-ring that is compressed in the groove and is working statically. Type ECOR is not appropriate for continuous dynamic operation due to its thin and soft encapsulation.

Advantages of ECOR:
- Chemically resistant to aggressive media as a result of the PTFE encapsulation
- Wide temperature range, –60 to +205 °C (–80 to +400 °F), material type PFA +260 °C (+500 °F)
- Anti-adhesive, no stick-slip effects
- Sterilizable, FDA approved
- Low steam permeability and low water absorption
- Low compression set solution

Back-up rings

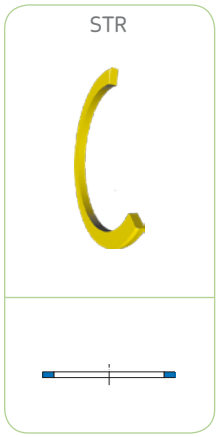

Back-up rings are intended to be used in conjunction with O-rings when the fitting clearance between the surfaces sealed by the O-ring is large enough to allow the O-ring to extrude at certain working pressures. In installations with normal and standardized dimensions and tolerances, the O-ring normally must be complemented with back-up ring(s) if the working pressure exceeds 10 MPa (1 450 psi), depending on the temperature.

In applications where the O-ring is exposed to pressure from one side only, the back-up ring is installed on the zero pressure side. For an O-ring exposed to pressure from both sides, a back-up ring is installed on either side.

SKF back-up rings are stocked with a basic design and are made of either polyurethane or of a polyester elastomer, for use together with O-rings according to Swedish or British-American Standards, respectively. This enables the use of back-up rings in most applications with normal pressure media and temperatures.

In applications with high temperatures or aggressive media, back-up rings of a PTFE material are suitable, either unfilled or with an appropriate filler. SKF keeps a large number of sizes of back-up rings of unfilled PTFE in stock. These are machine finished and can therefore be delivered on short notice.

Product index

Type/series	Description	Page
CRS1	Radial shaft seal	9
CRSA1	Radial shaft seal	9
CRSH1	Radial shaft seal	9
CRSHA1	Radial shaft seal	9
CRW1	Radial shaft seal	10
CRW5	Radial shaft seal	10
CRWA1	Radial shaft seal	10
CRWA5	Radial shaft seal	10
CRWH1	Radial shaft seal	10
CRWHA1	Radial shaft seal	10
CT1	Axial shaft seal	29
CT4	Axial shaft seal	29
CUT	Hydraulic seal	34
ECOR	Static seal	56
G	Hydraulic seal	36, 45
GA	Hydraulic seal	51
GC	Hydraulic seal	36, 45
GG	Hydraulic seal	36, 45
GH	Hydraulic seal	36
GHTL	Hydraulic seal	34
GH-XX8	Hydraulic seal	36
GL	Hydraulic seal	36, 45
GLC	Hydraulic seal	36, 45
GLG	Hydraulic seal	36, 45
GN	Hydraulic seal	36, 45
GR	Hydraulic seal	36, 45
GS	Hydraulic seal	36, 45
GS-XX8	Hydraulic seal	45
HDDF	Axial shaft seal	30
HDL	Radial shaft seal	13
HDLA	Radial shaft seal	13
HDS1	Radial shaft seal	14
HDS2	Radial shaft seal	14
HDS3	Radial shaft seal	14
HDS4	Radial shaft seal	18
HDS6	Radial shaft seal	18
HDS7	Radial shaft seal	13
HDSA1	Radial shaft seal	15
HDSA2	Radial shaft seal	15
HDSB1	Radial shaft seal	15
HDSB2	Radial shaft seal	15
HDSC1	Radial shaft seal	15
HDSC2	Radial shaft seal	15
HDSD1	Radial shaft seal	16
HDSD2	Radial shaft seal	16
HDSE1	Radial shaft seal	16
HDSE2	Radial shaft seal	16
HMS4	Radial shaft seal	9
HMS5	Radial shaft seal	8
HMSA7	Radial shaft seal	9
HMSA10	Radial shaft seal	8
HS4	Radial shaft seal	19
HS5	Radial shaft seal	19
HS6	Radial shaft seal	19
HS7	Radial shaft seal	19
HS8	Radial shaft seal	19
HSF1	Radial shaft seal	17
HSF2	Radial shaft seal	17
HSF3	Radial shaft seal	17
HSF4	Radial shaft seal	17
HSF5	Radial shaft seal	17
HSF6	Radial shaft seal	17
HSF7	Radial shaft seal	17
HSF8	Radial shaft seal	17
HSF9	Radial shaft seal	17
LDSLV3	Wear sleeve	25

Type/series	Description	Page
LDSLV4	Wear sleeve	25
MD-R	Hydraulic seal	35
MUD1	Radial shaft seal	23
MUD2	Radial shaft seal	23
MUD3	Radial shaft seal	23
MUD4	Radial shaft seal	23
MUD5	Radial shaft seal	23
MUD6	Radial shaft seal	23
MUD7	Radial shaft seal	23
MVR1	Axial shaft seal	29
MVR2	Axial shaft seal	29
OR	Static seal	56
PA	Hydraulic seal	50
PAD	Hydraulic seal	50
PAK	Hydraulic seal	50
PEN	Hydraulic seal	35
PGR	Hydraulic seal	54
PO	Hydraulic seal	51
PO2	Hydraulic seal	51
PWB	Hydraulic seal	52
PWY	Hydraulic seal	52
RD10	Radial shaft seal	11
RD11	Radial shaft seal	11
RD30	Radial shaft seal	11
RD60	Radial shaft seal	11
RD70	Radial shaft seal	11
RD71	Radial shaft seal	11
RDD13	Radial shaft seal	11
RDD14	Radial shaft seal	11
RDD15	Radial shaft seal	11
RGR	Hydraulic seal	54
SA	Hydraulic seal	38
SB	Hydraulic seal	54
SC	Hydraulic seal	54
SBF	Radial shaft seal	18
SCB	Hydraulic seal	51
SKF SCOTSEAL CLASSIC	Radial shaft seal	24
SKF SCOTSEAL LONGLIFE	Radial shaft seal	24
SKF SCOTSEAL PLUS XL	Radial shaft seal	24
SG	Hydraulic seal	42
SIL	Hydraulic seal	42
SKY	Hydraulic seal	43
SKF SPEEDI-SLEEVE	Wear sleeve	25
STR	Static seal	57
STR-D/A	Hydraulic seal	43
SUA	Hydraulic seal	38, 44
SUD	Hydraulic seal	38, 44
SUS	Hydraulic seal	38, 44
TIL	Hydraulic seal	42
UN	Hydraulic seal	43
URG	Hydraulic seal	35
VR1	Axial shaft seal	28
VR2	Axial shaft seal	28
VR3	Axial shaft seal	28
VR4	Axial shaft seal	28
VR5	Axial shaft seal	28
VR6	Axial shaft seal	28



® SKF, SPEEDI-SLEEVE, SCOTSEAL and WAVE are registered trademarks of the SKF Group.

™ DURATEMP is a trademark of the SKF Group.

© SKF Group 2008
The contents of this catalogue are the copyright of the publisher and may not be reproduced (even extracts) unless permission is granted. Every care has been taken to ensure the accuracy of the information contained in this catalogue but no liability can be accepted for any loss or damage whether direct, indirect or consequential arising out of the use of the information contained herein.

The data in this publication may differ from that shown in earlier publications because of redesign, technological developments or revised methods of calculation. SKF reserves the right to make continuing improvements to SKF products without prior notice with respect to materials, design and manufacturing methods, as well as changes necessitated by technological developments.

Publication **6373 EN** · March 2008

This publication supersedes publication 5244 EN.

Printed in Sweden on environmentally friendly, chlorine-free paper.

skf.com